NEW LIFT
NEUE ELEKTRONISCHE WEGE

SA3-S

Protection against unintended car movement

INSTALLATION & COMMISSIONING MANUAL

SA3-S

NEW LIFT
NEUE ELEKTRONISCHE WEGE

A3
CE 0035

Aufkleber S/N
SW - / HW - Version
Herstelldatum

Magnet RESET

Normal operation (display lights continuously)

left digit	Operating state	right digit	door input	SCCT-input	SCCT-Relay	Solenoid
1	Outside	0	open	off	open	off
2	Door open	1	closed	off	open	off
3	Door zone	2	open	on	open	off
4	Approach	3	closed	on	open	off
5	Relevelling	4	open	off	closed	off
6	Exit	5	closed	off	closed	off
		6	open	on	closed	off
		7	closed	on	closed	off
		8	open	off	open	on
		9	closed	off	open	on
		A	open	on	open	on
		b	closed	on	open	on
		C	open	off	closed	on
		d	closed	off	closed	on
		E	open	on	closed	on
		F	closed	on	closed	on

X1

Error (display flashes)

Display	Description
01	Approach speed
02	Relevelling speed
03	Approach overshoot
04	UCM outside of door zone (A3)
05	UCM relevelling (A3)
06	Acceleration
07	Can not test solenoid
10-11	Override
12	Solenoid feedback
14	Door zone
15-16	Lost of traction
17-18	Position encoder
20-23	EMC interference
25-26	Door relay monitor
27-28	Safety circuit relay monitor
FF	Internal

X2

For further details please see instruction

a_SA3-S_2014-11_en 00-00000

Manufacturer

NEW *LIFT* Steuerungsbau GmbH
Lochhamer Schlag 8
82166 Graefelfing

Tel +49 89 – 898 66 – 0
Fax +49 89 – 898 66 – 300
Mail info@newlift.de

www.newlift.de

Service line

Tel +49 89 – 898 66 – 110
Mail service@newlift.de

First version 16.11.2012

Author BP

Last change 04.11.2016 AL/EP

Release 06.12.2016 AL

Hardware version V1.41/V1.50

Software version

Doc. No. mia_SA3S_2016-12_en

Content

1 About this manual

The SA3-S safety device was developed to satisfy the "protection against unintended car movement" stipulated in the standard (EN 81-1:1998+A3:2009, 9.11).

Read these instructions carefully before installing and commissioning the safety device. In addition, chapter „2 General safety regulations“.

Objectives of this manual:

› Provision of the technical data
› Installation and commissioning instructions
› Maintenance instructions
› Test instructions
› Operation of the device.

1.1 General

This manual is intended to simplify installation and commissioning of the safety device. In addition, this manual also serves as a reference for the operator.

It describes the commissioning, installation and maintenance procedures for a lift in connection with the SA3-S safety device for the "protection against unintended car movement".

It contains important information for safe and proper installation and commissioning of the safety device.

Following these instructions will help to:

› prevent danger,
› avoid repair costs and downtime,
› increase the reliability and lifespan of the control system and of the lift system.

Local, national and on-site regulations regarding health and safety and protection of the environment must be taken into account in addition to this installation and commissioning manual.

This manual only describes the assemblies of the lift system delivered by NEW *LIFT*. For information about components of the lift system that were not manufactured and supplied by NEW *LIFT*, please refer to the respective user information supplied by the manufacturer or supplier.

1.2 Abbreviations and symbols used

The following signs and symbols are used for operational instructions:

Abbreviation	Description
SCCT	Safety circuit
PE	Protective Earth; earth wire
GND	Ground; reference potential for signal and operating voltages
AC	Alternating current
DC	Direct current
GB	Overspeed governor

Safety-relevant information

This symbol is located in front of safety-relevant information.

Information notice

This symbol is located in front of relevant information.

2 General safety regulations

All important safety regulations are summarised in this chapter. These safety instructions must always be adhered to during all work on the installation.

All persons performing installation and commissioning work on the SA3-S safety device must read this chapter and follow its regulations.

Laws, regulations, guidelines and standards that apply in the country of operation must be followed in addition to the safety regulations mentioned in this manual.

2.1 Qualifications of the installing engineer

The installing engineer must:

› be over 18 years of age (exception: apprentices who are over 16 years of age and are permanently supervised by an engineer qualified for training apprentices).

› have first aid training,

› have theoretical and practical knowledge of regulations and measures for the prevention of fire and explosions in his work area,

› be able to identify, avoid and rectify all dangers that might occur during his work in the shaft and in the operating rooms,

› be able to identify and rectify all irregularities and faults that might occur during installation and operation of a lift system,

› have theoretical and practical knowledge of operating principles and requirements of electric controls and drive systems.

All installation and commissioning work on electric and electronic components of the safety device must be performed by or supervised by a qualified electrician.

A qualified electrician has appropriate training and knowledge of regulations that allow him to judge the quality of the work performed and identify possible dangers (BGV A3).

2.2 Residual dangers

Danger for persons
The following shall always apply during all work on the installation:

Danger to life! Do not touch live parts while working on electrical equipment.

› Before starting work, make sure the system is off circuit.

› Only carry out any installation work on electrical components when these are switched off and in an unpowered state.

› Only use insulated tools when working on electrical system components.

› Pay attention to the accident prevention regulations.

Electrical hazard, leaking gas or water due to pierced supply lines. Risk of serious injury or death.

› Make sure no supply lines are in the installation location before starting any installation work.

› *Danger of falling! Installing engineers and unauthorised persons can fall down the shaft. Risk of serious injury or death.*

› Block the shaft access points.

› Use suitable protection (e.g. safety harnesses, scaffoldings) when working on or in the shaft.

Danger of crushing due to intentional or accidental car movement. Risk of serious injury or death.

› Block the shaft access points.

› Before starting any work, make sure that there are no persons in the shaft or in the vicinity of moving parts of the drive.

› Prevent unauthorised operation of the control system.

Risk of material damage

The following shall always apply during all work on the installation:

Electrostatic charging

› Keep the electronic assembly in its original packaging until installation.
› Before opening the original packaging, a static discharge must be performed. To do this, touch a grounded piece of metal.
› During work on electronic assemblies, periodically perform this discharge procedure.

Electronic assemblies are destroyed by defective, interchanged or incorrectly mounted connectors, short-circuiting or excess voltage.

› Check plugs for mechanical damage.
› Never change pre-assembled connectors or cables.
› Only connect loose or torn off wires according to circuit diagram details if this is possible on site (suitable material and tools must be available).
› Pay attention to coding pins and latch lugs.

2.3 Safety regulations

General

› The instructions of the lift manufacturer and the instructions in this manual must be followed during installation and commissioning of the safety device.
› The shaft must be secured against unauthorised trespassing during installation, commissioning, inspection and maintenance.
› Assemblies, devices and cables must be installed and fastened securely and permanently.
› Loads must be moved with suitable aids (lift trucks, hoisting gear etc.).
› Sharp and pointed tools or other potentially dangerous objects may only be carried along in clothing if suitable protective measures have been taken to rule out any danger.
› Alcohol and drugs must not be consumed before and during installation and commissioning.

Documentation

› A copy of the installation and commissioning manual must be available to the installing engineer at the time of installing and commissioning.
› A copy of the installation and commissioning manual and the wiring diagrams must be kept in the control cabinet at all times after installation.
› The wiring diagrams supplied with the SA3-S safety device are binding. Changes must only be made after consulting NEW *LIFT* and must be documented in writing on the system.
› The factory-side inspection records of the SA3-S safety device remain with the manufacturer.

Electricity

› Regulations for installing and operating electrical equipment (VDE 0100) and regulations of local utilities must be followed.
› The specified distances between different electrical assemblies must be controlled and maintained.
› All installation work must be carried out with the system shut down and off circuit.
› All cables and wires must be installed with sufficient strain relief.
› The neutral and ground wires must be routed separately.

Working in the shaft

› Any work in the shaft requires perfect and permanent communication between the supervisor on the lift controller and the workers in the shaft.
› Components in the shaft must be arranged or secured in such a way that persons accessing the shaft for inspection, maintenance or repair purposes are not in danger.
› The maximum load of the lift system must not be exceeded.
› The specified overruns of the emergency end switches in relation to the speed must be observed.
› The emergency installations must not be activated during normal operation.
› All emergency installations and braking systems must be checked for trouble-free operation and all shaft entrances closed off before beginning work.
› Installation and operation are prohibited if other persons could be in danger.
› Workers must be secured against falling.
› In case of any work interruptions, the car must be moved to the lowest stop position, the control system switched off and the power supply (e.g. UPS) permanently disconnected.

Personal safety equipment of the installing engineer

› Eye protection
› Safety boots
› Protective helmet
› Safety harness
› Clothing suitable to the ambient conditions of the installation location
› Jewellery, watches and similar items may not be worn; a hair net must be used if applicable.

Handling electronic assemblies

› Leave electronic assemblies in their original packaging until installation.
› Touch a grounded piece of metal prior to opening the original packaging to prevent damage from static charges.

Waste disposal

› All packaging material must be disposed of in an environmentally acceptable manner; paper, plastic, metal, electronic assemblies etc. must be recycled.

3 Technical data

Parameters	Min.	Type	Max.
Operating voltage[1]		24V DC	
Power consumption with energised solenoid		1A	
Power consumption with deenergised solenoid		0.3A	
Temperature: operation	0°C		65°C
Temperature: storage & transport	-20°C		70°C
Relative humidity: operation (non-condensing)	15%		85%
Relative humidity: storage & transport (non-condensing)	5%		95%
Cable length to overspeed governor[2]			100m
Cable length to control system			100m
Error-signal output current			0.7A
Protection type	IP64		
Possible safety circuit voltages[3]	230V/50Hz, 110V/50Hz, 24VDC - 150VDC		
Safeguarding of the safety circuit (external)			4A
Position resolution (pulse interval) with HJ200	0.94mm		
Position resolution (pulse interval) with HJ250	0.94mm		
Position resolution (pulse interval) with HJ300	0.92mm		
Reaction time "A3" until solenoid has deenergised			82 ms
Service life			20 years

Table 1: Technical data

[1] The operating voltage must also remain active during a power failure of the main supply (see chapter "Planning the system").

[2] The maximum possible cable length to the overspeed governor and to the control system is heavily dependent on the distance of the cable to other sources of interference.

[3] Possible safety circuit voltages: The required voltage must be specified when ordering

4 Planning the system

In order to use the SA3-S safety system together with a lift system, the following requirements must be satisfied:

1. The lift control system must make available a signal that always becomes inactive when the car is not to be moved ("**in motion**" signal). This signal must be inactive on each stop. Level: 0V (car is moving) / 24V or high impedance (car is not moving). The signal is needed in order to test the solenoids at the overspeed governor and to allow that the magnetic coil drops with closed doors (quiescent state of the lift).
2. The product must be supplied with power via a **24V emergency power device**.
   Reason: If power fails during travel, the solenoids must remain energised until the car stops, as the safety gear will otherwise be actuated. This delay is taken into account in the device, but can only take effect if the power supply is ensured for several seconds following power failure. Required is 24V/1A for about 10 sec. In addition, an UPS is needed in order to energise the solenoid during an emergency rescue so that the car can be moved. The emergency power supply must be designed accordingly.
3. An **override** input ensures that the car can also be moved in the event of a power failure so that persons can be freed.
   In the override state, the solenoid energises and the safety circuit relay opens. Level: 0V (override) / high impedance (normal operation). For override, a separate switch must be wired in the control cabinet. It is to be labelled with "Ovrd. SA3-S".
4. The **safety gear** that is to be used in combination with the SA3-S must satisfy the requirements of EN 81-1:1998 + A3:2009 or EN81-2:1998 + A3:2009
5. The **car apron** must satisfy the requirements of EN 81-1:1998 + A3:2009 point 8.4.
   An apron acc. to EN 81-21 is permissible only if the car apron satisfies the requirements specified in EN 81-1, section 8.4 over the entire shaft upon leaving the lowest floor. If this cannot be ensured, the calculation of the permissible upward stopping distance (see chapter "Upward stopping distance") can only take into account the vertical part of the car below the car threshold for the apron length.
6. A formula must be used to theoretically verify that the car achieves the **stopping distance** specified in the standard. The "upward" and "downward" cases are to be calculated separately. The following data are necessary for this purpose:
   - Maximum length of the door zones in the up and down directions (normally 200mm in both directions)
   - Maximum reaction path of safety gear and overspeed governor (the path of the car from the time the safety cable is blocked until the safety gear reaches its guaranteed braking deceleration) in both directions
   - Minimum braking deceleration of the safety gear in both directions
   - Internal passage height to the car interior (for calculating the maximum downward stopping distance)
   - Length of the apron below the car (for calculating the maximum upward stopping distance)
   - Mass of empty car, cable and counterweight (for calculating the maximum possible upward acceleration)

   The product may only be used if the required stopping distances can be achieved. For some parameters, standard values may be used.
7. The **safety circuit** of the lift system must be modified according to the specifications. In the standard device, the safety circuit voltage is 230V / 50Hz. Other voltages are possible on request.
8. The PowerGood input signals a **power failure** at the control system. Level: 24V: current present / 0V or high impedance: power failure. Ideally, this input is supplied by the power supply of the control system.
9. If the system is equipped with the "approach with open doors" function, the two **door zone signals** must be wired. These signals must also be monitored by an external safety circuit bypass control. Level: 24V (door zone) / 0V or high impedance (outside of the door zone).
10. To **reset** the product in the A3 case or after an error, a button ("reset") can be wired in the control cabinet. Level: 24V (reset) / 0V or high impedance (normal operation). The button is to be labelled with "Reset SA3-S". Alternatively, the SA3-S safety device can be reset with the aid of a magnet below the display.
11. The "**error**" output of the product can be wired with an error lamp (24V, max. 0.7mA) or with the control system. This output is for information only and is not a safety function. The error lamp is not necessary if the device display can be viewed.If the error output is read by the controller, the controller must not stop the system in case of an error.

12. Reset button and error display can be replaced by a "**display module**" in the control cabinet.
13. **Position**: SA3-S generates a two-channel incremental output which can be used as a position input for the control system. The resolution of the output is better than 1mm. Level: differential driver stage (2x two-wire)
14. For the purpose of the **arrest test**, a button (N.C.) can be connected in the power supply of the device (connection B-3). Upon actuation of the button, the solenoid on the overspeed governor deenergises and the safety gear is triggered.
15. The SA3-S safety system can be installed in hydraulic lifts. If a double-acting safety gear is used here, the same premises apply as to rope lifts. If only one safety gear should be used in the downwards direction, the following requirements must be met:
    - Safety gear in the downwards direction must conform to the requirements of EN81-2:1998 + A3:2009.
    - According to EN 81 the speed restrictor must also have force guided safety switches which opens the safety circuit in upward direction during magnet releasing.
    - Voltage of safety circuit must act directly on the braking element (e. g. motor contactor), i. e. by opening the safety circuit the car must come to a standstill through gravitational force.
16. In case of **hydraulic lifts** the safety gear should not get jammed, during the car with the releasing solenoid coil is sinking slowly. For that prupose, the controller might activate the signal „in motion“for a short time.
17. The SA3-S safety device has electronic inputs. In order to avoid disturbances of the system, carry out suitable **interference suppression measures**. These include:
    - Suppression circuits of all inductors (contactor, relay, brake systems…)
    - Suitable line filter for disruption of safety circuit from motor control
    - Suitable shielding of the cables to the motor and to the the inverter etc.
    - As possible a separate laying of the disturbing cable lines
18. Your **order** should indicate the connection variant (NEW *LIFT* cable or standard cable)

5 Interfaces

5.1 Circuit variants

There are 4 valid circuit variants for the SA3-S safety system. The following information applies to all variants:

› In case there is no door bypass in the system, the two door zone inputs are not required, they are left open. The rest of the circuit will remain consistently. It is advisable to use in this case variant 2.

› Both GND potentials (from the power supply 24V and 24V emergency power supply) can be connected together externally.

› If the system has the auxiliary control, the safety circuit relay **can** be placed in the safety circuit, where it is bypassed by the auxiliary control. Safety circuit relay can be located at any position in the safety circuit, e.g. also in front of the door contacts.

Attention! During simultaneous use of override and auxiliary control make sure that all shaft and car doors are closed.

5.1.1 A general variant

The general variant can be used for all types of installations. However, it is recommended to examine the implementation in order to minimise the wiring effort. The variants from 2 to 4 shall be reviewed for implementation.

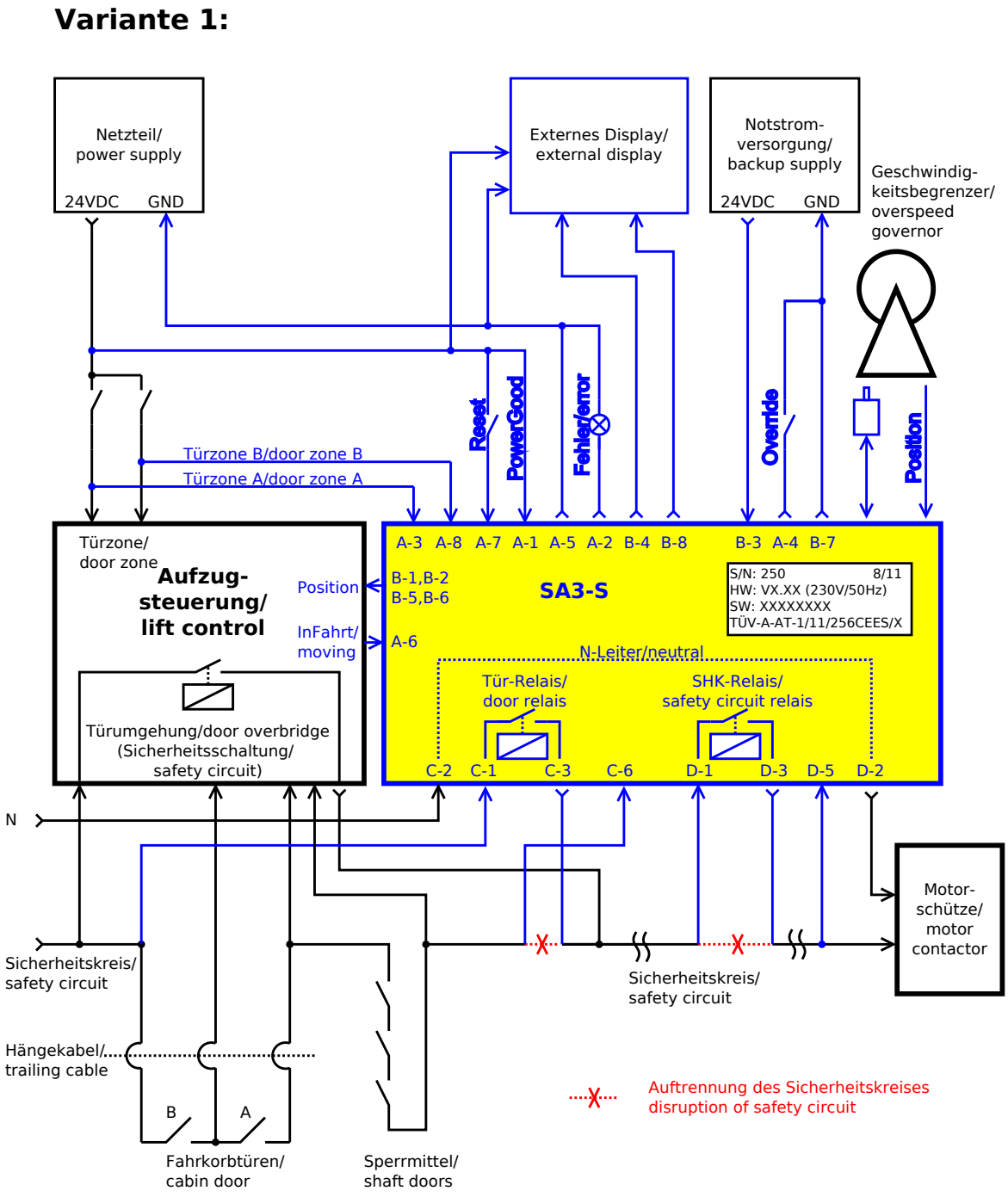

Figure 1: Overview of the complete system (variant 1)

5.1.2 The system without door bypass

If the system does not have a door bypass, the door input is connected behind the last door in the safety circuit. The door relay has no function in this case.

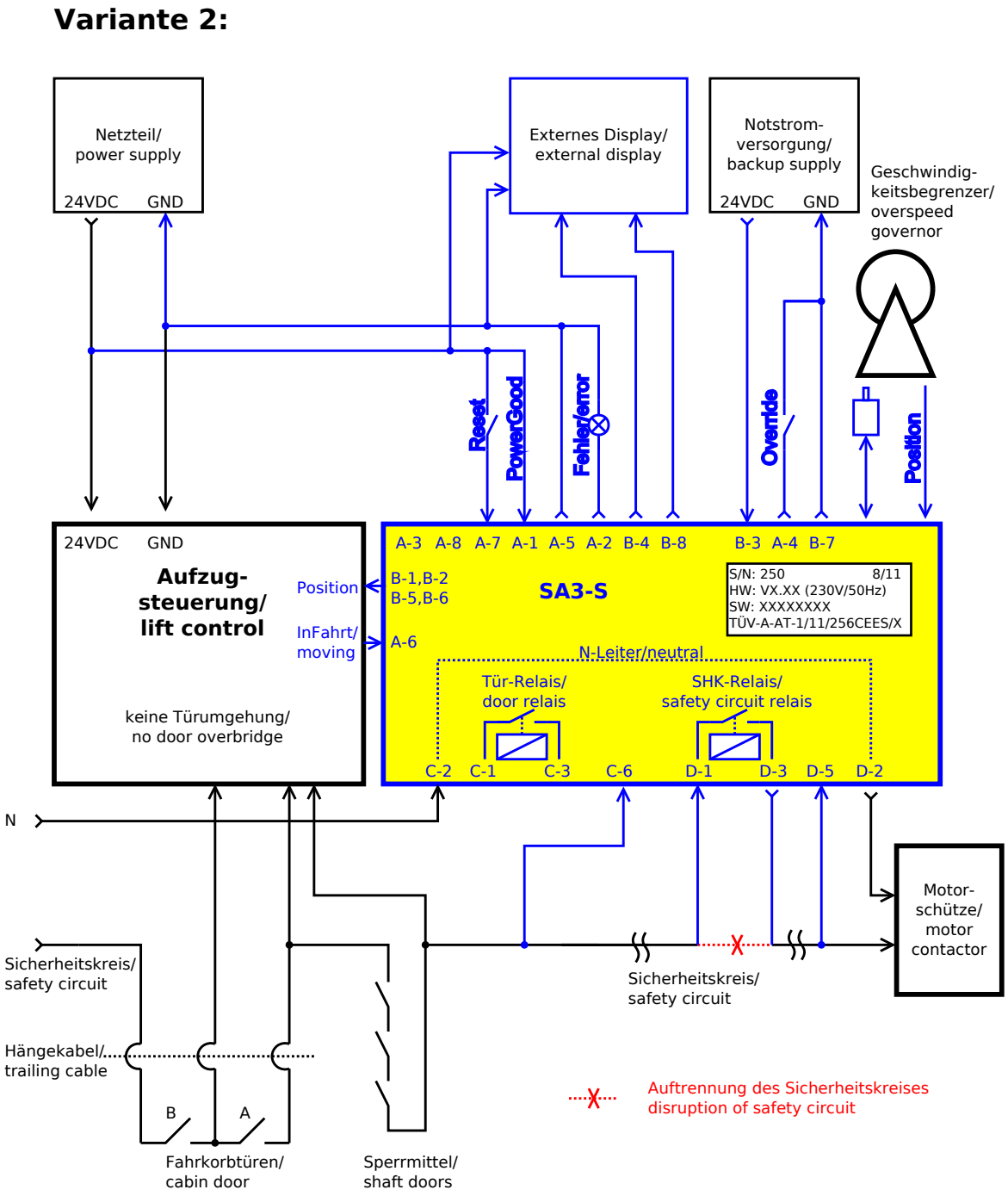

Figure 2: Overview of the complete system (variant 2)

5.1.3 The system with automatic doors

If the system has automatic doors, i.e. during normal operation shaft and car doors always open simultaneously, the door input is connected between car and shaft doors (door lock) in the safety circuit. The door relay has no function in this case.

Variante 3:

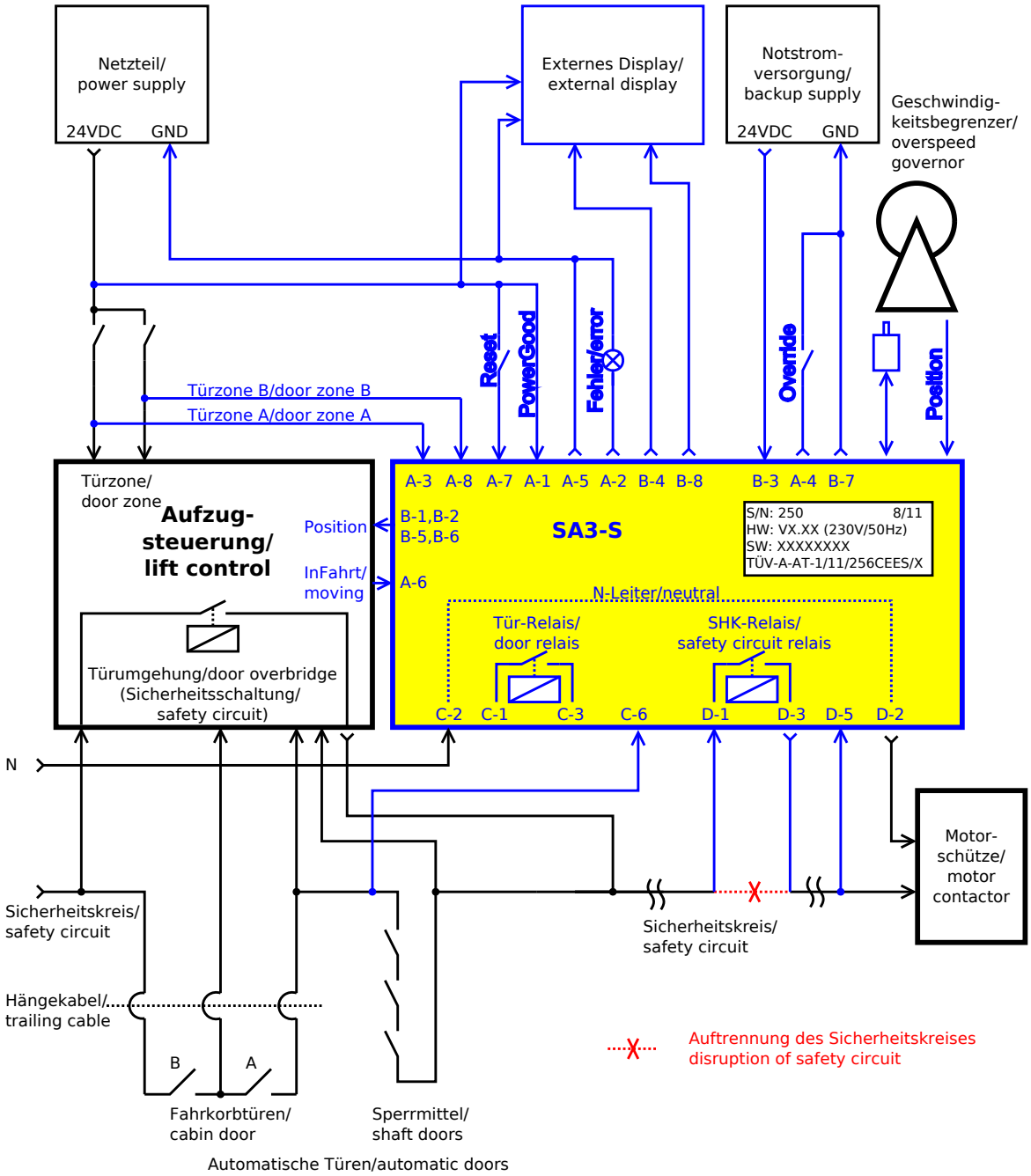

Figure 3: Overview of the complete system (variant 3)

5.1.4 The system with manual doors

If the system has the manual doors, that have a manual door contact as well as a bolt contact (door lock) in the safety circuit, the door input is connected between manual door contact and bolt contact. The order of the car door switch in the safety circuit is not important in this case.

Variante 4:

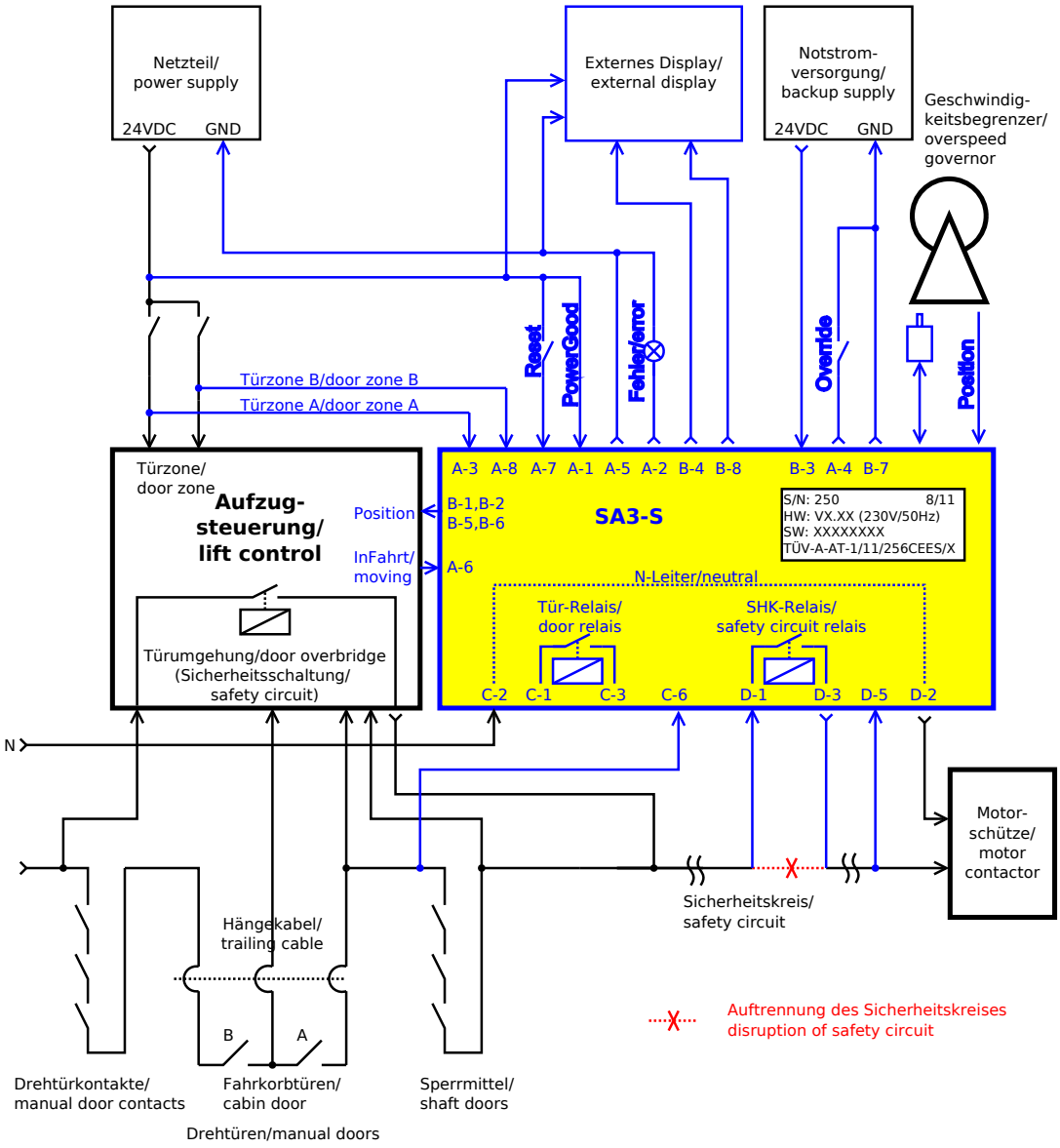

Figure 4: Overview of the complete system (variant 4)

5.2 Connection to the control system

There are two different variants for the connection to the control system: the 16-pin standard cable and the 12-pin NEW *LIFT* cable with the additional encoder cable.

5.2.1 Standard cable (16-pin)

The specified wire colours apply for the 16-pin standard cable:

SA3-S	Wire	Signal	Level[4]
A-1	white	PowerGood (input, high-active), the signal must become inactive in the event of a power failure (emergency power operation)	24V: no power failure
A-2	brown	Error (output, high-active), the output can control a small error lamp or similar	24V: error
A-3	green	Door zone A (input, high-active)	24V: door zone
A-4	yellow	Override (input, low-active)	0V: override
A-5	grey	GND (control system, not buffered)	
A-6	pink	InMotion (input, low-active)	0V: InMotion
A-7	blue	Reset (input, high-active), input for resetting an error state	24V: reset
A-8	red	Door zone B (input, high-active)	24V: door zone
B-1	black	Position /A (output)	line driver
B-2	violet	Position /B (output)	line driver
B-3	grey/pink	24V emergency power supply	
B-4	red/blue	Display module (output, D-)	line driver
B-5	white/green	Position A (output)	line driver
B-6	brown/green	Position B (output)	line driver
B-7	white/yellow	GND emergency power supply	
B-8	yellow/brown	Display module (output, D+)	line driver

Table 2: Pin assignments for the control system standard cable

[4] The unspecified input levels can be set to the opposite potential or be high impedance.

PowerGood (A-1):

The signal indicates to the safety device whether the power supply of the lift is OK. During emergency power operation, the safety device is separated from the power supply 10 sec. after the car is stopped to avoid loading the supply batteries unnecessarily.

Error (A-2):

The output indicates that an error which must be reset manually has occurred in the device. A small signal lamp can be operated on this output. Alternatively, the error can be read on the display.

Door zone (A-3, A-8):

The two door zone inputs indicate that the car is currently in a door zone. They must be independent of one another (2-channel).

The door zone inputs must be monitored by a tested safety circuit bypass control (EN81-1, 14.2.1.2) which prevents operation of the lift in case of an error (EN81-1, 14.1.2.3.2.1.).

The door zone inputs are not connected, if the installation has no door bypass (the safety circuit bypass control).

Override (A-4):

If the override input is set to GND, the solenoid energises. It is used for freeing persons. If the safety device is supplied with power (PowerGood), an error is detected, that ensures that the safety circuit is opened. The override input also functions in the event of a power failure, since this function is supplied by the emergency power battery. If override is not active, the input must be high impedance.

Attention: The car must not be moved if the solenoid is deenergised, since the safety brake is then active. The emergency release should remain locked until the override is active.

InMotion (A-6):

The input is used to signal to the safety device that the car is to be moved by the control system. It is needed for testing the solenoid. In addition, the solenoid deenergises if the car is at a standstill with closed doors (not "InMotion").

This measure serves to save wear and tear on the solenoid and helps to reduce the stand-by losses. The reference potential is GND (A-5)

Reset (A-7):

An error state can be reset via this input (see chapter "Behaviour in case of errors").

Position output (B-1, B-2, B-5, B-6)

The control system can be supplied with an incremental position signal via the position output. The reference potential is GND (A-5)

Display module (B-4, B-8):

An external display module can be connected via this output. It has the same display as the internal display. The internal 7-segment display on the remote display module is duplicated.

5.2.2 NEW *LIFT* cable (12-pin) with the additional encoder cable

The specified wire colours apply for the 12-pin NEW *LIFT* cable:

SA3-S	Wire	Signal	Level[5]
A-1	white	PowerGood (output, high-active), the signal must become inactive in the event of a power failure (emergency power operation)	24VDC: no power failure
A-2	brown	Error (output, high-active), the output can control a small error lamp or similar	24VDC: error
A-3	green	Door zone A (input, high-aktiv)	24VDC: door zone
A-4	yellow	Override (input, low-aktive)	0V: override open: override off
A-5	grey	GND (control system, not buffered)	
A-6	pink	InMotion (input, low-active)	0V: InMotion
A-7	blue	Reset (input, high-active), input for resetting an error state	24VDC: reset
A-8	red	Door zone B (input, high-aktiv)	24VDC: door zone
B-3	black	24V emergency power supply	
B-4	violet	Display module (output, D-)	line driver
B-7	grey-pink	GND emergency power supply	
B-8	red-blue	Display module (output, D+)	line driver

Table 3: Pin assignments for the control system NEW *LIFT* cable

[5] The unspecified input levels can be set to the opposite potential or be high impedance.

Encoder cable:

This cable includes the encoder signals with a NEW *LIFT* compatible plug for FST-2.

Nr.	Wire colour	SafeBox	Signal	Internal
1		B-1	position /A (output, line driver)	position_/A
2		B-2	position /B (output, line driver)	position_/B
3		B-5	position A (output, line driver)	position_A
4		B-6	position B (output, line driver)	position_B

Table 4: Pin assignments NEW *LIFT* encoder cable

The descriptions of the signals correspond to the descriptions in chapter 5.2.1.

5.3 Connection to the safety circuit

As already explained above (see chapter „circuit types “), there are four possibilities to integrate the system in the safety circuit of installation.

The system can be delivered for various voltage types of safety circuit (AC and DC). The standard version is 230V/50Hz.

Terminal assignment of signals from the safety circuit:

SA3-S	Wire	Signal
C-1	1	Door simulation (input, door relay)
C-2	2	Input N-wire (AC) or GND (DC)
C-3	3	Door simulation (output, door relay)
C-4	4	Earth
C-5	5	Earth
C-6	6	Door safety circuit (door input)
D-1	7	Safety circuit relay (input, scct relay)
D-2	8	Output N-wire (AC) or GND (DC)
D-3	9	Safety circuit relay (output, scct relay)
D-4	10	Earth
D-5	11	Safety circuit (scct input)
D-6	PE	Earth

Table 5: Pin assignments for the safety circuit

In general:

› The safety circuit must be opened at the input C-6, if the car door or a shaft door is opened.

› The N-wire (the GND wire) of safety circuit must be led over the safety device.
The separation of N-wire connection must cause deactivating of the main contactor!

› The auxiliary control can bypass the safety circuit with a force-guided contact. Bypassing is required to free trapped passengers.

5.3.1 A general variant

The general variant can be used for all types of installations.

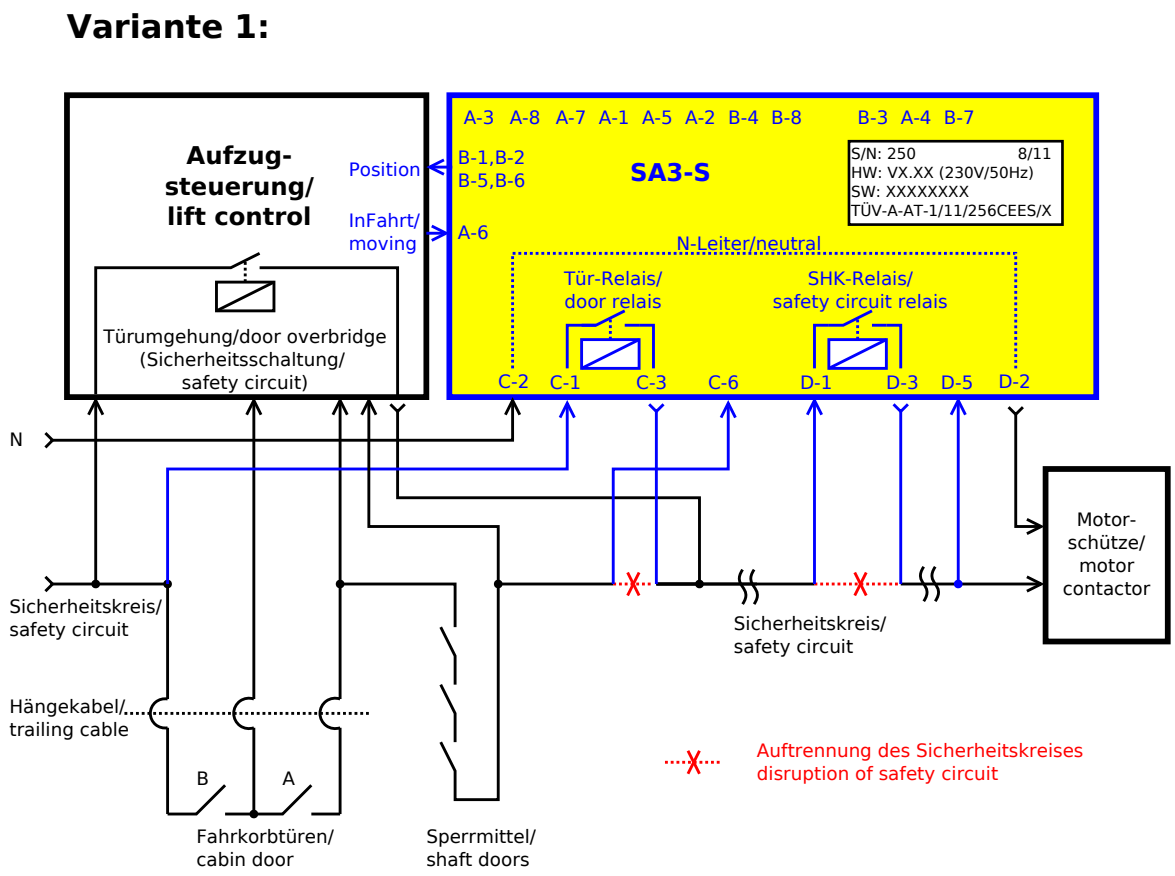

Figure 5: Modification of the safety circuit (variant 1)

Explanation of the wiring diagram:

› The safety circuit is interrupted at the end of the series connection of the door contacts. The door contacts are connected to input C-6.

› With the aid of the door relay, the safety device ensures that the safety circuit is closed if all doors are closed. For this purpose, the start of the door series connection must be connected to input C-1, and the end (after interruption) must be connected to C-3.

› The safety circuit input D-5 should be connected to the end of the safety circuit. It is responsible, among other things for the detection of the loss of traction, i.e., if the a safety circuit is open but the car is still moving or is not braked, it is „force-braked“.

› The relay of safety circuit can be looped in at any point in the safety circuit. It opens in case of an error (e.g., A3 detection) and is closed again by resetting the error. The safety circuit relay is not bypassed by override. To release persons by means of auxiliary mode control, it must be placed at a point in the safety circuit that is bypassed by auxiliary mode. The safety circuit relay is opened every 24 hours for a short time. This is necessary to guarantee the proper operation of the relay.

⚠ Attention! During simultaneous use of override and the auxiliary control make sure that all shaft and car doors are closed.

5.3.2 The system without door bypass

This variant is always to be used if the system does not have a door bypass.

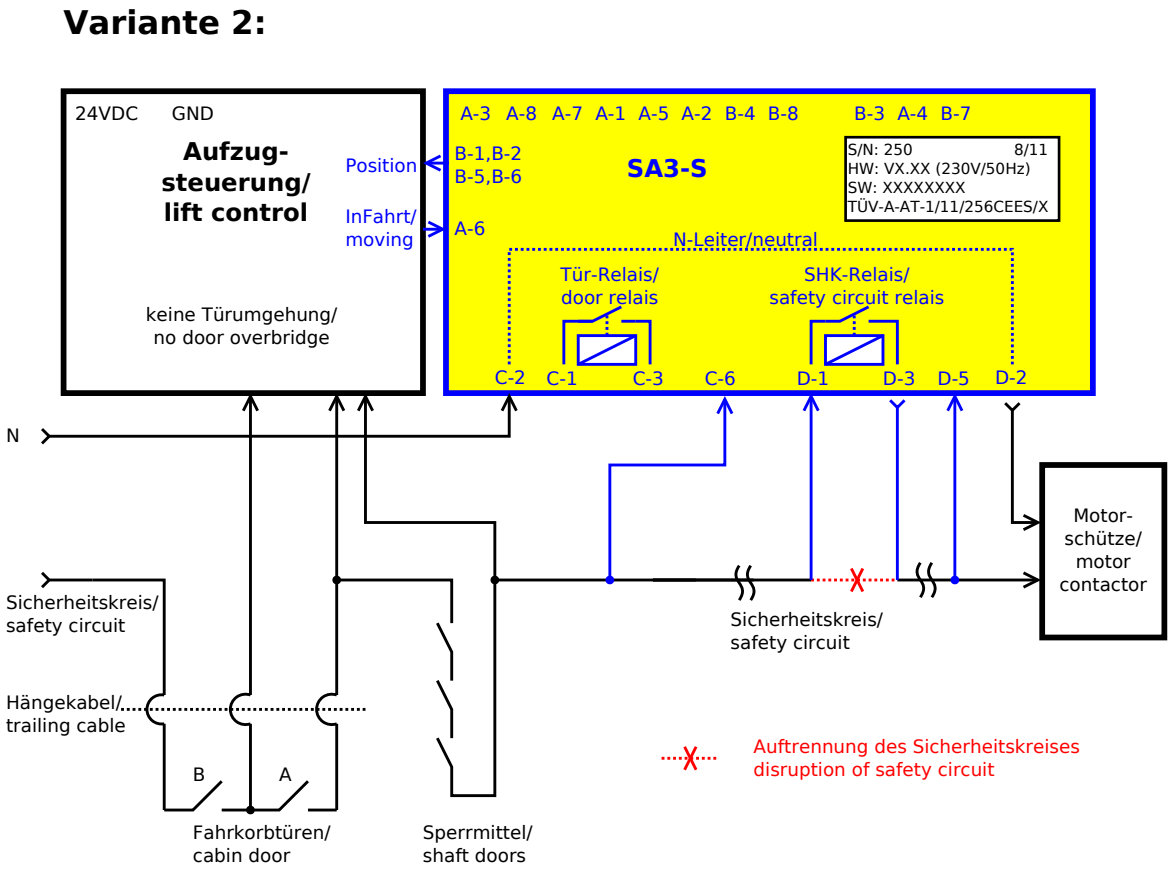

Figure 6: Modification of the safety circuit (variant 2)

Explanation of wiring diagram:

› The safety circuit must not be disrupted after the doors. The input C-6 is be connected to the safety circuit after the last door.

› The door relay is **not** integrated into the safety circuit.

› The safety circuit input D-5 should be connected to the end of the safety circuit. It is responsible, among other things for the detection of the loss of traction, i.e., if the a safety circuit is open but the car is still moving or is not braked, it is „force-braked“.

› The relay of safety circuit can be looped in at any point in the safety circuit. It opens in case of an error (e.g., A3 detection) and is closed again by resetting the error. The safety circuit relay is **not** bypassed by override. To release persons by means of auxiliary mode control, it must be placed at a point in the safety circuit that is bypassed by auxiliary mode. The safety circuit relay is opened every 24 hours for a short time. This is necessary to guarantee the proper operation of the relay.

⚠ Attention! During simultaneous use of override and the auxiliary control make sure that all shaft and car doors are closed.

5.3.3 The system with automatic doors

This variant should be used if the system has automatic doors, i.e. during normal operation shaft and car doors always open simultaneously.

Variante 3:

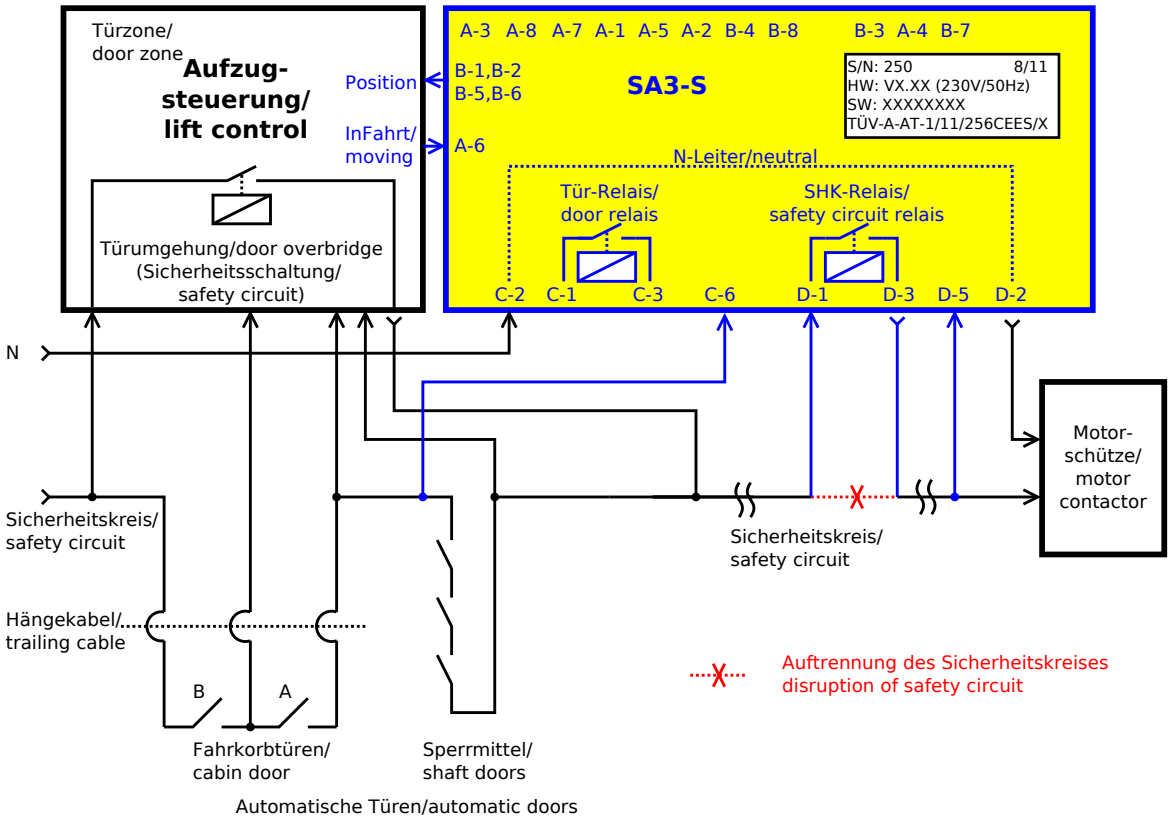

Figure 7: Modification of the safety circuit (variant 3)

Explanation of wiring diagram:

› The safety circuit must not be disrupted after the doors. The input C-6 is connected to the safety circuit between car and shaft doors (locking device).

› The door relay is not integrated into the safety circuit.

› The safety circuit input (D-5) should be connected to the end of the safety circuit if possible. It also detects the loss of traction capacity, i.e. if the a safety circuit input is open, the car still moves and does not brake, it will be „braked by force“.

› The relay of safety circuit can be wired into the safety loop at any position. It opens in the event of an error (e.g., A3 release) and is closed again by resetting the error. The relay of a safety circuit is not bypassed by override. To release persons by means of auxiliary mode control, it must be at a point in the safety circuit that is bypassed by auxiliary mode. The relay of safety circuit is opened briefly every 24 hours. This is necessary to guarantee the proper operation of the relay.

⚠ Attention! During simultaneous use of override and auxiliary control make sure that all shaft and car doors are closed.

5.3.4 The system with manual doors

This variant should be used if the shaft doors have two safety circuit contacts (a manual door contact and a bolt contact). The door input is connected between manual door contact and bolt contact. The order of the car door switch in the safety circuit is not important in this case.

Variante 4:

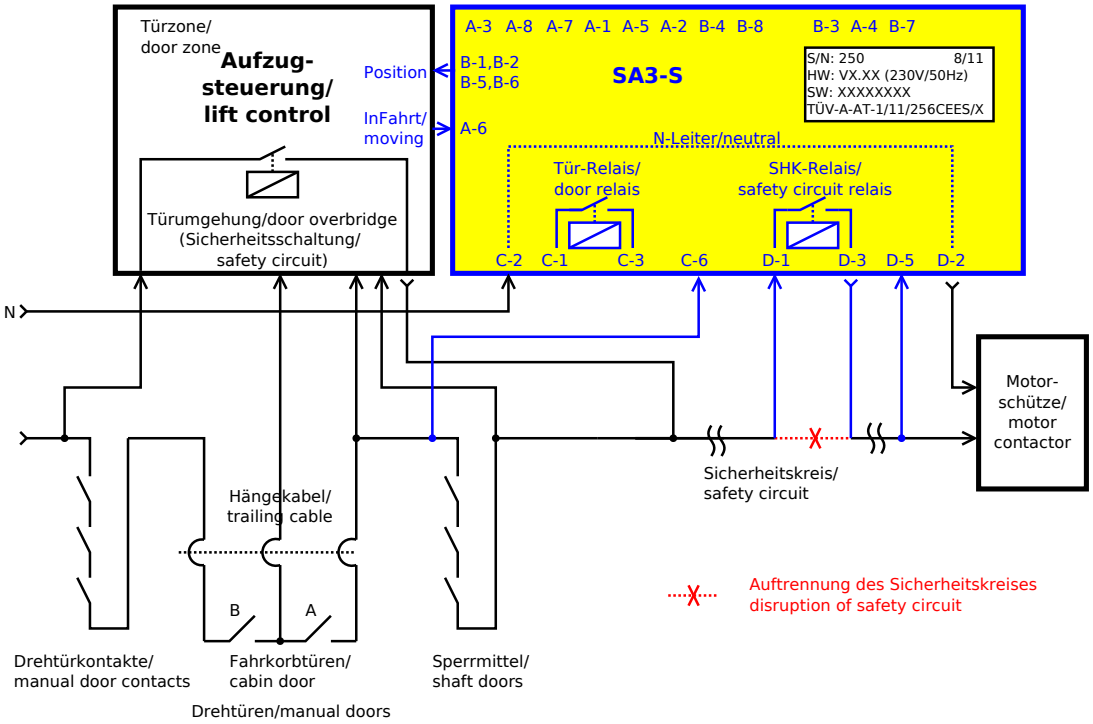

Figure 8: Modification of the safety circuit (variant 4)

Explanation of the wiring diagram:

› The safety circuit must not be disrupted after the doors. The input C-6 is connected to the safety circuit between manual door contact and bolt contact. The order of the car door switch in the safety circuit is not important in this case.

› The door relay is **not** integrated into the safety circuit.

› The safety circuit input D-5 should be connected to the end of the safety circuit. It is responsible, among other things for the detection of the loss of traction, i.e., if the a safety circuit is open but the car is still moving or is not braked, it is „force-braked“.

› The relay of safety circuit can be wired into the safety loop at any position. It opens in the event of an error (e.g., A3 release) and is closed again by resetting the error. The relay of a safety circuit is not bypassed by override. To release persons by means of auxiliary mode control, it must be at a point in the safety circuit that is bypassed by auxiliary mode. The relay of safety circuit is opened briefly every 24 hours. This is necessary to guarantee the proper operation of the relay.

⚠ Attention! During simultaneous use of override and auxiliary control make sure that all shaft and car doors are closed.

5.4 Display

5.4.1 Normal operation

In **normal operation**, important status information of the system appears on the display. The system is in normal operation if the display illuminates continuously and the error output is inactive (error lamp does not light up).

The **left digit** of the display shows the current state of the car:

Left digit	Operating state	Description
1-	Outside	The car is located outside of a door zone; the doors are closed
2-	Door open	The car is located outside of a door zone; at least one door is open
3-	Door zone	The car is located within a door zone; the doors are closed
4-	Approach	The car is approaching a floor with open doors
5-	Re-levelling	The car moves with open doors within a door zone (re-levelling)
6-	Exit	The car is within a door zone; the doors are closed again

Table 6: Display - left side

The **right digit** of the display shows the most important inputs and outputs of the system. The display is encoded in hexadecimal format.

Right digit	Door input Door relay	SHK input	SHK relay	Solenoid
-0	Open	Off	Open	Off
-1	Closed	Off	Open	Off
-2	Open	On	Open	Off
-3	Closed	On	Open	Off
-4	Open	Off	Closed	Off
-5	Closed	Off	Closed	Off
-6	Open	On	Closed	Off
-7	Closed	On	Closed	Off
-8	Open	Off	Open	On
-9	Closed	Off	Open	On
-A	Open	On	Open	On
-b	Closed	On	Open	On
-C	Open	Off	Closed	On
-d	Closed	Off	Closed	On
-E	Open	On	Closed	On
-F	Closed	On	Closed	On

Table 7: Display - right side

The **decimal point** in the 7-segment displays indicates, that there is voltage at least in one of the two safety circuit inputs. If two safety circuit inputs are open and the decimal point still lights up, there is voltage through a capacitive coupling. This is not a malfunction. When being put into operation, in this case it has to be ensured, that the coupled voltage do not exceed the allowed dimension.

Process of stops within the door zone:

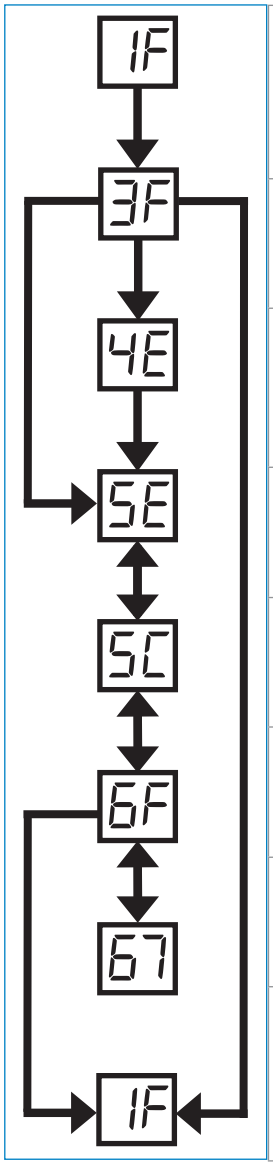

	Outside of the zone range: Car is not in the door zone range. Doors are closed.
	Door zone: Car has approached a door zone. Doors are closed.
	Approaching / Landing: Car moves in the door zone. Doors are bypassed and opened (approaching / landing with open doors).
	Re-levelling: Car is in the door zone. Doors are bypassed and opened.
	Re-levelling: Car is in the door zone. Doors are opened. Bypass is not active.
	Ascending: Car is in the door zone. Doors are closed. The solenoid is attracted.
	Standby: Car is in the door zone. Doors are closed. The solenoid is released.
	Outside of the zone range: The car is not in the door zone range. The doors are closed.

Table 8: Process of stops within of the zone range

Process of stops outside of the zone range

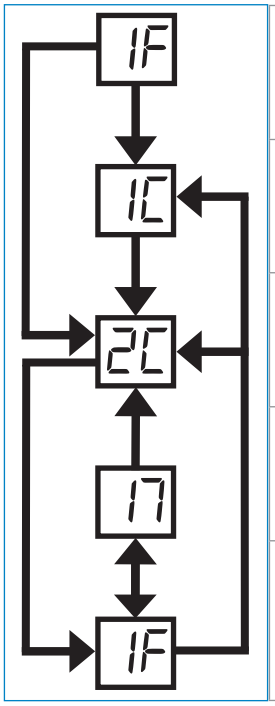

	Outside of the zone range: The car is not in the door zone range. The doors are closed.
	Outside of the zone range: Doors are opened. Car is still moving (vibration of the car during landing).
	Door open: Car with open doors without movement.
	Outside of the zone range: Car with closed doors without movement. The solenoid is released.
	Outside of the zone range: The car is not in the door zone range. The doors are closed.

Table 9: Process of stops outside of the zone range

5.4.2 Error messages

If an error is present in the system, the display switches to **error mode**. In this case, the error number **flashes** on the display. The first error will always be displayed. Following errors does not appear on the display.

List of possible errors:

Display	Level	Description
01	2	Approach speed too high (approaching with open doors)
02	3	Re-levelling speed too high (re-levelling with open doors)
03	3	Approaching with open doors beyond the door zone
04	3	Car moves with open doors (outside of a door zone)
05	3	Re-levelling with open doors beyond the door zone
06	3	Acceleration too high (free-fall situation)
07	1	Solenoid could not be tested
08	1	SHK relay could not be tested
09	3	solenoid will not activate
10	3	solenoid off, short circuit to GND (or override)
11	3	solenoid on, short circuit to GND (or override)
12	1	Error in feedback circuit of the solenoid
13	3	Solenoid could not be tested
14	3	Error in the external safety circuit or in the door zone inputs
15	3	Car moves while safety circuit open (loss of traction)
17	3	Error in position input (channel 1)
18	3	Error in position input (channel 2)
19	1	Different positions in both channels
20	1	Fault in a safety circuit input (EMC)
21	2	Fault in a safety circuit input (EMC)
22	3	Fault in a safety circuit input (EMC)
23	1	Fault in the internal bus system
24	3	Internal fault (EMC)

Display	Level	Description
25	2	Error in door relay monitoring
26	2	Error in door relay monitoring
27	3	Error in safety circuit relay monitoring
28	3	Error in safety circuit relay monitoring
30	2	Comparison of safety circuit input between the channels
31	2	Comparison of door input between the channels
32	1	Comparison of door zone input between the channels
33	2	Comparison of feedback circuits switch of solenoid between the channels
40	1	„in motion“ signal is missing
60 to 66	1 or 2	The safety circuit input C-6 (door input) interrupted
70 to 76	1 or 2	The safety circuit input D-5 (SHK end) interrupted
81 82 83	2 or 3	Failures caused by undervoltage of the 24 VDC supply
90	3	Internal fault (EMC)
91	3	Internal fault (EMC)
92	3	Internal fault (EMC)
FF	1-3	Internal error (contact manufacturer)

Table 10: List of error codes

Description of the error levels:

Level 1	The system waites until the car stops moving and doors are open. Then relay of safety circuit will open. This brings car to a standstill.
Level 2	Relay of safety circuit will open immediately. This brings car to an immediate standstill.
Level 3	Relay of safety circuit will open immediately. Solenoid will be released. This brings car to a standstill.

Table 11: List of error levels

The chapter 8 (behaviour in case of errors) describes how to behave in case of errors.

5.5 Remote Display Module

In cases where the SA3-S has to be mounted in an inaccessible location where direct operation of the unit or reading of the display is not possible, the operation can be done via external display module, that is mounted on a DIN rail TS35 in the control cabinet. The module duplicates the internal display SA3-S and provides a error reset switch. Additionally provides a door-zone indicator.

The current version of external display module duplicates additionally to the existing functions also the two decimal points for detecting capacitive coupling.

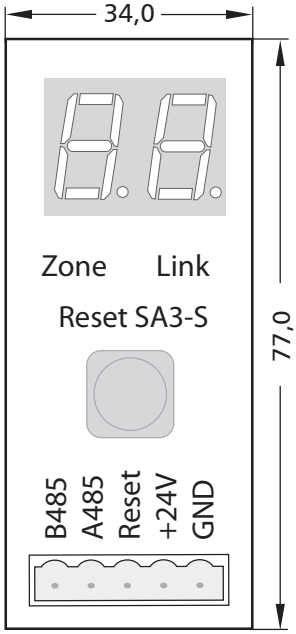

Figure 9: Dimensions Remote Display Module in mm

5.5.1 User Interfaces

Double digit 7-segment LED display:

The 7-sement LED display duplicates the SA3-S's built-in display. It will show „--“ („minus,minus“) whenever it does is not receiving valid data.

Yellow LED (door zone):

The yellow LED indicates that the car is currently inside the door-zone. When either of the two door-zone signals of the SA3-S are closed, the LED is illuminated, otherwise it is turned off.

Green LED (communications link):

The Green LED indicates that data is being received by the Remote Display Module via the RS485 lines.

Red Button (SA3-S reset):

The red button can be used to reset a SA3-S error. The reset procedure is the same as when using a separately hard wired reset switch.

Electrical connections:

Terminal	Description	SA3-S-terminal	Function
1	B485	B4	RS485 data line (negative)
2	A485	B8	RS485 data line (positive)
3	Reset	A7	resetting the output of errors
4	+24V	A1	power supply (24V ±10%, 40mA)
5	GND	A5	reference potential

Table 12: Electrical connections Remote Display Module

6 Installation

The SA3-S can be installed either at the overspeed governor or near the control system. Ideally, installation is such that the display can be seen. The remote display module is then not necessary.

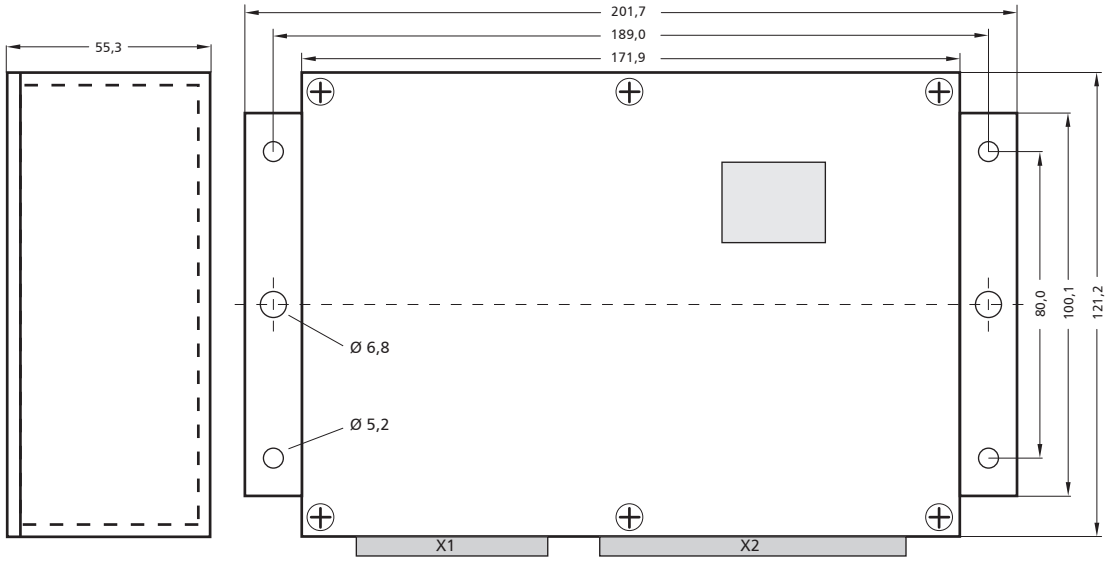

Figure 10: SA3-S dimensions in mm

On the bottom of the housing, an additional approx. 100mm are needed for plugs and cable outlet. The left plug (X1) is the connection to the overspeed governor (position sensor, solenoid and readback contact). The right plug (X2) contains the connection to the control system. Both the safety circuit as well as the 24V control signals are transmitted here. Outside of the plug, two or three separate lines are used for safety circuit and control signals.

Connection to the overspeed governor:

The connection to the overspeed governor is pre-assembled by the Jungblut company (order option: cable length).

Connection to the control system:

The connection to the control system is pre-assembled by the Jungblut company (order option: cable length). The connection to the control system consists of two or three separate cables for the safety circuit and the 24V control signals. Cable assignments correspond to tables from chapter 5.

7 Commissioning

During the course of its manufacture, the SA3-S safety device passes through a test procedure which ensures that the device leaves the manufacturer in perfect condition. If the device was damaged during transport, please contact the manufacturer.

Installation

1. Installation and commissioning of the overspeed governor is described in the provided manual
2. Switch off the main switch of the control system.
3. Install the safety device at the intended location in the machine room, shaft or control cabinet
4. Connect the overspeed governor and the safety device with the cable provided for this purpose (X1, small plug on safety device)
5. Connect the control system and the safety device with the cable provided for this purpose (X2, large plug on safety device)
6. Switch on the main switch of the control system.
7. The display on the safety device must light up.
8. If the display flashes (error) or if the error lamp lights up, try to reset the error (see chapter "Behaviour in case of errors").
9. If the error cannot be reset, try to rectify the error with the aid of the error number (see chapter "Display")
10. Testing of the safety-relevant functions is described in chapter "Test during commissioning".

7.1 Remote Display Module

The module should be connected according to the terminal assignment „table 12 electrical connections Remote Display Module“. After the SA3-S is powered, the Remote Display Module will start operating immediately, and duplicate the SA3-S‘s built-in display.

› Check that the displays on the Remote Display Module and the SA3-S are the same.

› Check that the door-zone indicator functions correctly.

› Press the red reset button when the car is stationary, and check that the the display on the Remote Display Module shows „88“

Information:

If the green communications-link LED is illuminated, but the display on the Remote Display Module is showing „--“, try swapping the two RS485 data lines.

8 Behaviour in case of errors

An error is indicated by the lighting of the error lamp or the flashing of the (external or internal) 7-segment display. The flashing error number provides indication of the location at which the error may have occurred.

If an error occurs, rectify the error with the aid of the error number (see chapter "Display"). If that is not possible, please contact the system supplier.

The following steps must be performed to reset a detected error:

1. The error lamp lights up and the display flashes the error code.
2. Rectify the error. In doing so, the display on the safety device may be of assistance (see chapter "Display").
3. Activate the error reset input (press and hold the reset button) or place a strong permanent magnet (e.g., BP15 from the Schmersal company) under the display.
4. All segments of the display are then switched on (display shows "88"). A brief time later, the display goes dark and the error output (error lamp) switches off.
5. You now have two seconds in which to release the reset button or to remove the magnet. The error is reset only during this time window.
6. If, following an error reset, the display continues to flash or if the error output is active, all errors have not yet been rectified. Repeat the reset procedure until no further errors are displayed.

Comment on the magnet:

At the marked location on the bottom of the internal display is a magnet sensor which triggers the reset procedure. If the reset does not function reliably, try changing the orientation of the magnet.

9 Function test during commissioning

After installing the SA3-S safety system, the lift engineer must ensure that all components function properly. The following test steps are to be performed. If one of the test steps fails, switch off the installation at the main switch and find the error.

Information:

For hydraulic elevators without counterweight the brake won‘t be released (test step 9.16, 9.17 and 9.18), but the drain valve will be opened. The car does not move upwards, but starts to move downwards. The test in the door zone must be carried out at the bottom of the door zone.

All test steps to carry out in the door zone are invalid for the systems without door bypass with functions „approaching with open doors“ or „re-levelling“.The system is permanently „outside the door zone“.

Test step	Description	Confirmation
9.1	**Calculation of the stopping distance for the A3 function:** With the aid of a calculation, it must be verified that the stopping distance in the event of an unintended car movement with open doors (A3 function) corresponds to the distances required in the standard (see appendix "Calculation the stopping distance").	
9.2	**Visual inspection:** Check whether there are any visible mechanical defects. Examples: Defective safety device housing, defective connector sleeve housing, chafed cables, soiled solenoid, locking solution on the overspeed governor, etc.	
9.3	**Mechanical inspection:** Mechanical inspection of the fasteners (solenoid, position encoder, safety device, overspeed governor).	
9.4	**Earth continuity test:** Using a continuity tester, check whether the housing of the safety device is electrically connected to earth. To do this, measure the continuity between the housing and another earthed location.	
9.5	**Switching on:** Switch on the system; the display of the safety device must light up.	
9.6	**Display:** If an error is displayed, reset it (see chapter "Behaviour in case of errors"). Check whether the display corresponds to the actual state of the car (see chapter "Display"). If there are deviations (e.g., door zone is not detected), check the wiring.	
9.7	**Error behaviour in event of power failure:** If an error is displayed, reset it. Switch off the emergency power supply or open terminal B-3. This interrupts the operating voltage of the safety device. Check whether the safety device is switched off. This can be determined by the fact that display is dark, the solenoid is deenergised and the safety circuit is open. Reverse the manipulation. The safety device must again function properly. Produce an error on the safety device (e.g., briefly actuate the override and reset it). An error must be displayed on the safety device. Switch off the emergency power supply or open terminal B-3. After a brief time, reverse the manipulation. The safety device must still display an error, the safety circuit must be open and the solenoid must be deenergised. Reset the error.	
9.8	**Function test of feedback circuit:** If an error is displayed, reset it. Produce an error on the safety device by manually moving the magnet on the overspeed governor to the opposite position. An error („ I2“) must be displayed on the safety device. Reset the error.	

Test step	Description	Confirmation
9.9	**Emergency power supply, emergency release and PowerGood:** If an error is displayed, reset it. Switch off the power supply of the control system or open the PowerGood input (terminal A-1) on the safety device. Check whether the safety device switches off on its own approximately 10 sec. later. This can be determined by the fact that display is dark, the solenoid is deenergised and the safety circuit is open. Afterwards, switch the control system back on or reconnect the PowerGood signal. The safety device must again function properly. Actuate the override and reset it. An error must be displayed on the safety device. Switch off the power supply of control system or open the PowerGood input (terminal A-1) on the safety device. Check whether the safety device switches off on its own approximately 10 sec. later. Afterwards, switch the control system back on or reconnect the PowerGood signal. The safety device must still display an error, the safety circuit must be open and the solenoid must be deenergised. Reset the error.	
9.10	**Test of the zone switch (2-channel operation):** Move the car to a door zone with the aid of the inspection controller. Make certain that both door zone signals originate from independent zone switches. You can check this by individually toggling the zone switches on the car with the aid of a magnet or by disconnecting the connections on the magnet switch (for further information, see also the test of the safety circuit bypass control). It is important to switch to the status „not both zone switches are active“, when one of the both zone input is off. Display: <table><tr><td></td><td>Both zone switches are active</td><td>Not both zone switches are active</td></tr><tr><td>SHK open</td><td>„3-„ or „6-„</td><td>„ 1-„</td></tr><tr><td>SHK closed</td><td>„5-„</td><td>„2-„</td></tr></table>	
9.11	**Test of the closed position of the door relay and of the safety circuit relay:** Move the car to a position outside of a door zone, close all doors and check whether the safety circuit is closed.	
9.12	**Test of the door input and of the door relay:** Close and open a door and check whether the state of the door appears correctly on the display and whether the safety circuit of the system opens and closes (the door bypass must be inactive during the test).	
9.13	**Test of the error reset, test of the safety circuit relay:** Switch off power to the installation. Simulate an error by unplugging the small plug of the safety device. Switch on the installation. The safety device must detect an error (display flashes, error lamp lights up). Check whether the safety circuit opens. Reverse the manipulation. Reset the error via the external error reset (reset button). If there is no external reset, use the magnetic reset to reset the error. (see chapter "Behaviour in case of errors").	
9.14	**Test of the safety circuit input:** Close and open the safety circuit (e.g., at the inspection controller) and check whether the state of the safety circuit is shown correctly on the display.	
9.15	**Test of the InMotion signal, test of the solenoid:** Check whether the solenoid deenergises if the car is at a standstill, if the doors are closed and if no drive command is pending.	

Test step	Description	Confirmation
9.16	**Test of safety circuit monitoring:** Position the car between two floors (outside of the door zone). Switch off power to the installation. Open the safety circuit input of the safety device (terminal D-5). Switch on the installation. Close all doors. Release the brake, causing the car to move slowly. Check whether the safety catch engages. The safety device must display error „ 15“ (flashing). Reverse the manipulation. Free the car from the safety gear with the aid of override and auxiliary mode. Reset the error.	
9.17	**Test of the A3 function (outside of the door zone):** Position the car between two floors (outside of the door zone). Switch off power to the installation. Open the door input and the scct input of the safety device (terminal C-6 and D-5). Switch on the installation. Release the brake, causing the car to move slowly. The safety device must display error „04“ or „ 15“(flashing). Reverse the manipulation. Free the car from the safety gear with the aid of override and auxiliary mode. Reset the error.	
9.18	**Test of the A3 function (within the door zone):** Turn off „relevelling“ in the controller. Position the car in the door zone, not over 10cm from the upper edge of the door zone away (not on the top floor). Switch off power to the installation. Open the door input of the safety device (terminal C-6) or open a door. Switch on the installation. Release the brake, causing the car to move away from the floor. Check that, at the edge of the door zone, the magnet deenergises, causing the safety gear to engage. The safety device must display error „05“(flashing). Reverse the manipulation. Free the car from the safety gear with the aid of override and auxiliary mode. Reset the error. Turn on „relevelling“ in the controller, if necessary.	
9.19	**Test of monitoring of the safety circuit bypass control:** Use the auxiliary mode control to position the car so that it is not flush in a door zone and leave auxiliary mode switched on. Relevelling must be turned on in the corntroller. Switch off power to the installation. Open a door zone input (A-3) and the door input (C-6) on the safety device. Switch on the installation. Switch off the auxiliary control. The control system activates the safety circuit bypass control for the purpose of re-levelling and attempts to re-level. The safety device detects an error „ 14“ (flashing) because the safety circuit is closed, while the doors are open and the car is not in a door zone for the safety device. Reverse the manipulation. Reset the error.	

Test step	Description	Confirmation
9.20	**N-conductor interruption:** Position the car on a floor. It must be possible to move the car with the aid of auxiliary mode. Switch off power to the installation. Open terminal C-2 (N-conductor) of the safety device. Switch on the installation. The car must no longer move with the aid of auxiliary mode, since the main contactors no longer energise. Reverse the manipulation. Switch off power to the installation. Open terminal D-2 (N-conductor) of the safety device. Switch on the installation. The car must no longer move with the aid of auxiliary mode, since the main contactors no longer energise. Reverse the manipulation. It must again be possible to move the car with the aid of auxiliary mode.	
9.21	**Capacitive coupling (only AC- safety circuit):** Caused by a capacitive coupling on long lines (travelling cable, lines in shaft) it may happen that voltage at the door entrance is unacceptably high even though one door is opened. Move the car to the lowest stop position and open the door there. Switch on all AC-consuming devices (e.g car lighting, shaft light), lying parallel to safety circuit. If the two decimal points on the display in this state are off, but they light with closed safety circuit, the capacitive coupling is not available. In this case proceed to the next test step. Using a multimeter, measure the voltage with a corresponding voltage range at the door entrance C-6 in comparison to N-wire (C-2). Repeat the procedure for the highest stop position. **For version 230V/50Hz: The voltage may have a maximum of 42VAC.** **For version 110V/50Hz: The voltage may have a maximum of 24VAC.** (See chapter 14.3 „Capacitive coupling“)	
9.22	**Be absolutely certain to again reverse all manipulations of the safety circuit!**	

Table 13: Test steps during commissioning

10 Inspection during commissioning

Inspection procedure is carried out by a notified body after installation of the the SA3-S safety system. The following test steps must be carried out. If one of the test steps was not successful, turn off the system at the main switch and diagnose the fault.

Information:

For hydraulic elevators without counterweight the brake won‘t be released (test step 10.10, 10.11 and 10.12), but thedrain valve will be opened. The car does not move upwards, but starts to move downwards. The test in the door zone must be carried out at the bottom of the door zone.

All test steps to carry out in the door zone are invalid for the systems without door bypass with functions „approaching with open doors“ or „re-levelling“. The system is permanently „outside the door zone“.

Test step	Description	Confirmation
10.1	**Calculation of the stopping distance for the A3 function:** With the aid of a calculation, it must be verified that the stopping distance in the event of an unintended car movement with open doors (A3 function) corresponds to the distances required in the standard (see appendix "Calculation of the stopping distance").	
10. 2	**Visual inspection:** Check whether there are any visible mechanical defects. Examples: Defective monitoring box housing, defective connector sleeve housing, chafed cables, soiled solenoid, damaged locking solution on the overspeed governor, etc.	
10.3	**Mechanical inspection:** Mechanical inspection of the fasteners (solenoid, position encoder, safety device, overspeed governor).	
10.4	**Earth continuity test:** Using a continuity tester, check whether the housing of the safety device is electrically connected to earth. To do this, measure the continuity between the housing and another earthed location.	
10.5	**Function test of feedback circuit:** If an error is displayed, reset it. Produce an error on the safety device by manually moving the magnet on the overspeed governor to the opposite position. An error „ I2“ (flashing) must be displayed on the safety device. Reset the error.	
10.6	**Emergency power supply, emergency release and PowerGood:** If an error is displayed, reset it. Switch off the power supply of the control system or open the PowerGood input (terminal A-1) on the safety device. Check whether the safety device switches off on its own approximately 10 sec. later. This can be determined by the fact that display is dark, the solenoid is deenergised and the safety circuit is open. Afterwards, switch the control system back on or reconnect the PowerGood signal. The safety device must again function properly. Actuate the override and reset it. An error must be displayed on the safety device. Switch off the power supply of control system or open the PowerGood input (terminal A-1) on the safety device. Check whether the safety device switches off on its own approximately 10 sec. later. Afterwards, switch the control system back on or reconnect the PowerGood signal. The monitoring device must still display an error, the safety circuit must be open and the solenoid must be deenergised. Reset the error.	

Test step	Description	Confirmation
10.7	**Test of the zone switch (2-channel operation):** Position the car in a door zone. Make certain that both door zone signals originate from independent zone switches. You can check this by, e.g., individually toggling the zone switches on the car with the aid of a magnet or by disconnecting the connections on the magnet switch. (For more information, see also the test of the safety circuit bypass control.) It is important to switch to the status „not both zone switches are active“, when one of the both zone input is off. Display: [table below]	
10.8	**Test of the door input and of the door relay:** Close and open a door and check whether the state of the door appears correctly on the display (see chapter 5.4.1) and whether the safety circuit of the system opens and closes (the door bypass must be inactive during the test)**.**	
10.9	**Test of the error reset, test of the safety circuit relay:** Switch off power to the installation. Simulate an error by unplugging the small plug of the safety device. Switch on the installation. The safety device must detect an error (display flashes, error lamp lights up). Check whether the safety circuit opens. Reverse the manipulation. Reset the error via the external error reset (reset button). If there is no external reset, use the magnetic reset to reset the error. (see chapter "Behaviour in case of errors")	
10.10	**Test of safety circuit monitoring:** Position the car between two floors (outside of the door zone). Switch off power to the installation. Open the safety circuit input of the safety device (terminal D-5). Switch on the installation. Close all doors. Release the brake, causing the car to move slowly. Check whether the safety catch engages. The safety device must display error „ 15“. Reverse the manipulation. Free the car from the safety gear with the aid of override and auxiliary mode. Reset the error.	
10.11	**Test of the A3 function (outside of the door zone):** Position the car between two floors (outside of the door zone). Switch off power to the installation. Open the door input of the safety device (terminal C-6 and D-5). Switch on the installation. Release the brake, causing the car to move slowly. The safety device must display error „04“ or „ 15“ (flashing). Reverse the manipulation. Free the car from the safety gear with the aid of override and auxiliary mode. Reset the error**.**	

	Both zone switches are active	Not both zone switches are active
SHK open	„3-„ or „6-„	„ 1-„
SHK closed	„5-„	„2-„

Test step	Description	Confirmation
10.12	**Test of the A3 function (within the door zone):** Turn off „relevelling“ in the controller. Position the car in the door zone, not over 10cm from the upper edge of the door zone away (not on the top floor). Switch off power to the installation. Open the door input of the safety device (terminal C-6) or open a door.. Switch on the installation. Release the brake, causing the car to move away from the floor. Check that, at the edge of the door zone, the magnet deenergises, causing the safety gear to engage. The safety device must display error „05“(flashing). Reverse the manipulation. Free the car from the safety gear with the aid of override and auxiliary mode. Reset the error. Turn on „relevelling“ in the controller, if necessary.	
10.13	**Test of monitoring of the safety circuit bypass control:** Use the auxiliary mode control to position the car so that it is not flush in a door zone and leave auxiliary mode switched on. Relevelling must be turned on in the corntroller. Switch off power to the installation. Open a door zone input (A-3) and the door input (C-6) on the safety device. Switch on the installation. Switch off the auxiliary control. The control system activates the safety circuit bypass control for the purpose of re-levelling and attempts to re-level. The safety device detects an error „ 14“ (flashing) because the safety circuit is closed, while the doors are open and the car is not in a door zone for the safety device. Reverse the manipulation. Reset the error.	
10.14	**N-conductor interruption:** Position the car on a floor. It must be possible to move the car with the aid of auxiliary mode. Switch off power to the installation. Open terminal C-2 (N-conductor) of the safety device. Switch on the installation. The car must no longer move with the aid of auxiliary mode, since the main contactors no longer energise. Reverse the manipulation. Switch off power to the installation. Open terminal D-2 (N-conductor) of the safety device. Switch on the installation. The car must no longer move with the aid of auxiliary mode, since the main contactors no longer energise. Reverse the manipulation. It must again be possible to move the car with the aid of auxiliary mode.	
10.15	**Capacitive coupling (only AC- safety circuit):** Caused by a capacitive coupling on long lines (travelling cable, lines in shaft) it may happen that voltage at the door entrance is unacceptably high even though one door is opened. Move the car to the lowest stop position and open the door there. Switch on all AC-consuming devices (e.g car lighting, shaft light), lying parallel to safety circuit. If the two decimal points on the display in this state are off, but they light with closed safety circuit, the capacitive coupling is not available. In this case proceed to the next test step. Using a multimeter, measure the voltage with a corresponding voltage range at the door entrance C-6 in comparison to N-wire (C-2). Repeat the procedure for the highest stop position. **For version 230V/50Hz: The voltage may have a maximum of 42VAC**. **For version 110V/50Hz: The voltage may have a maximum of 24VAC**. (See chapter 14.3 „Capacitive coupling“)	
10.16	**Be absolutely certain to reverse all manipulations of the safety circuit again!**	

Table 14: Test steps during commissioning

11 Annual inspection

The prescribed inspection interval is one year.

The following test steps are necessary to carry out annual inspection:

Information:

For hydraulic elevators without counterweight the brake won‘t be released (test step 11.4), drain valve is opened. The car does not move upwards, but starts to move downwards. The test in the door zone must be carried out at the bottom of the door zone.

All test steps to carry out in the door zone are invalid for the systems without door bypass with functions „approaching with open doors“ or „re-levelling“. The system is permanently „outside the door zone“.

Test step	Description	Confirmation
11.1	**Life cycle:** Check whether the maximum service life of the SA3-S (20 years) has been exceeded. Relevant is the age of the oldest component (monitoring electronics or overspeed governor**).**	
11.2	**Visual inspection:** Check whether there are any visible mechanical defects. Examples: Defective monitoring box housing, defective connector sleeve housing, chafed cables, soiled solenoid, damaged locking solution on the overspeed governor, …	
11.3	**Mechanical inspection:** Manually check the fasteners (solenoid, position encoder, safety device, overspeed governor, connectors)	
11.4	**Test of the A3 function (outside of the door zone):** Position the car between two floors (outside of the door zone). Switch off power to the installation. Open the door input of the safety device (terminal C-6 and D-5). Switch on the installation. Release the brake, causing the car to move slowly. The safety device must display error „04“ or „ 15“ (flashing). Reverse the manipulation. Free the car from the safety gear with the aid of override and auxiliary mode. Reset the error.	
11.5	**Be absolutely certain to reverse all manipulations of the safety circuit again!**	

Table 15: Test steps during annual inspection

The electronic components, including the position sensors, were designed for maintenance-free operation for a life cycle of up to 20 years. For this reason, no further tests are necessary during annual inspection.

12 Replacing existing systems

The following steps are necessary to replace a SA3-S Box in an existing system:

1. The installing engineer / service technician must make sure that the new box works properly. In addition he has to carry out the test steps again (see chapter “Function test during commissioning”).
2. A notified body need not carry out a re-examination of the whole system. If the test procedure changes during replacement (see chapter „Inspection during commissioning“), the notified body must carry out changed testing steps during the next regular inspection of the site.

Information:

A new test step 10.15 („Capacitive coupling“) has existed since hardware version V1.31. This test step is therefore to carry out once by the notified body.

13 Waste disposal

At the end of the maximum life cycle of 20 years, the SA3-S safety device may no longer be operated. It is to be disposed of properly.

14 Appendix

14.1 Release of trapped persons

Described here is how persons can be freed if trapped in the car.

ATTENTION:

When using override and auxiliary mode control at the same time it is to ensure that all shaft and car doors are closed.

Upon actuation of the override, a safety system of the lift system is disabled. From this time on, the safety of the enclosed persons is the responsibility of the installation operator.

1. In the event of a power failure, switch off the main switch.
2. Activate the override.
3. Move the car to the next floor by either releasing the brake, by using auxiliary mode control or opening the valve, etc.).
4. Allow the passengers to exit.
5. Switch the main switch back on again.

For other escape facilities, see the respective lift system.

14.2 Calculating the stopping distance

During commissioning, it is to be verified by means of a calculation that the maximum stopping distance corresponds to the values required by the standard. This verification is to be performed separately for both directions.

The calculations apply only for one progressive safety gear. For other braking elements (e.g. safety gear downward) the customer is responsible to provide evidence of stopping distance according to A3.

The calculation is performed with the aid of the formulas given below. The values in the fields with a thick border must be determined before starting the calculation. Please note that it may be necessary to convert the values to the correct units.

14.2.1 Downward stopping distance

A: Initial situation (end of the door zone):

For a lift without door zones, initial position x_A=200mm is to be used.

Gravitational acceleration	g	9810 mm/s²
Downward acceleration[6]	$a_A = g$	9810 mm/s²
Distance of the lower door zone edge from "flush"	x_A	mm
Initial speed	v_A	315.0 mm/s

[6] The "downward acceleration" a_A = g specified here is the worst case. For individual cases, a lower value, which shortens the stopping distance accordingly, can be used following consultation with the tester on site.

B: Reaction time of the safety device and of the solenoid: The safety device and the solenoid require a certain amount of time before they detect the error state and can react to it.

Reaction time	t_B	0.082 s
Position	$x_B = x_A + v_A t_B + a_A t_B^2/2$	mm
Speed	$v_B = v_A + a_A t_B$	mm/s

C: Reaction distance of overspeed governor and safety gear:

The overspeed governor and the safety gear require a certain distance before the brakes can take effect.

Reaction distance of overspeed governor	x_G	mm
Reaction distance of safety gear	x_F	mm
Reaction distance of overspeed governor + safety gear	$x_{GF} = x_G + x_F$	mm
Position	$x_C = x_B + x_{GF}$	mm
Speed	$v_C = \sqrt{v_B^2 + 2 a_A x_{GF}}$	mm/s

D: Braking distance of the safety gear:

The progressive safety gear requires a braking distance before the car comes to a standstill.

Minimum brake delay of the safety gear	a_B	mm/s²
End position	$x_D = x_C + v_C^2 / 2a_B$	mm

Maximum stopping distance:

The max. stopping distance is dependent on the height of the door passage (at least 2000mm).

Door passage height	x_T	mm
Max. downward stopping distance	$x_{max} = x_T$ - 1000mm	mm

In the worst case, maximum stopping distance x_{max} must be greater than or equal to end position x_D of the car. The requirement according to EN81-1:2010, 9.11.6 is then satisfied.

14.2.2 Upward stopping distance

A: Initial situation (end of the door zone):

For a lift without door zones, initial position x_A=200mm is to be used.

Gravitational acceleration	g	9810mm/s²
Mass of counterweight	m_G	kg
Mass of cables	m_S	kg
Mass of car (empty)	m_F	kg
Maximum upward acceleration [7]	$a_A = g\ (m_G + m_S - m_F) / (m_G + m_S + m_F)$	mm/s²
Distance of the upper door zone edge from "flush"	x_A	mm
Initial speed	v_A	315.0mm/s

[7] The „downward acceleration“ a_A = g specified here is the worst case. For individual cases, a lower value, which shortens the stopping distance accordingly, can be used following consultation with the tester on site.

B: Reaction time of the safety device and of the solenoid:

The safety device and the solenoid require a certain amount of time before they detect the error state and can react to it.

Reaction time	t_B	0.082s
Position	$x_B = x_A + v_A t_B + a_A t_B^2/2$	mm
Speed	$v_B = v_A + a_A t_B$	mm/s

C: Reaction distance of overspeed governor and safety gear:

The overspeed governor and the safety gear require a certain distance before the brakes can take effect.

Reaction distance of overspeed governor	x_G	mm
Reaction distance of safety catch	x_F	mm
Reaction distance of overspeed governor + safety catch	$x_{GF} = x_G + x_F$	mm
Position	$x_C = x_B + x_{GF}$	mm
Speed	$v_C = \sqrt{v_B^2 + 2 a_A x_{GF}}$	mm/s

D: Breaking distance of the safety gear:

The progressive safety gear requires a braking distance before the car comes to a standstill.

Brake delay	a_B	mm/s²
Position	$x_D = x_C + v_C^2/2a_B$	mm

Maximum stopping distance:

The max. stopping distance is dependent on the length of the apron below the car and the door passage height.

Apron length	x_S	mm
Maximum upward stopping distance	$x_{Smax} = x_S + 200mm$	mm
Door passage height	x_T	mm
Stopping way door passage height	$x_{Tmax} = x_T - 1000mm$	mm
Max. upward stopping distance	x_{max} = minimum (x_{Smax}; x_{Tmax})	mm

Comment on the apron length:

The car apron must satisfy the requirements of EN 81-1:1998 + A3:2009 point 8.4. The apron length is then the vertical distance between the car threshold and the "lowest part of the car apron" (see EN 81-1:1998 + A3:2009, sections 9.11.5 and 9.11.6, figure 4).

An apron according to EN 81-21 is only permissible if the car apron satisfies the requirements specified in EN 81-1, section 8.4 over then entire shaft upon leaving the lowest floor. If this cannot be ensured, only the vertical

part of the car below the car threshold may be taken into account in the calculation of the maximum upward stopping distance.

Maximum stopping distance x_{max} must be greater than or equal to the worst case end position x_D of the car. The requirement according to EN81-1:2010, 9.11.6 is then satisfied.

14.3 Capacitive coupling

14.3.1 Basics

Following conditions are required for the safety-critical effects of the capacitive coupling:

1. The system is based on alternating voltage.

2. Active and inactive conductors run parallel.

3. Low electrical load on the inactive conductor.

4. Low voltage on the inactive conductor turns on the system.

In a lift system these conditions are possibly met:

1. The safety circuit is operated with alternating voltage (50Hz).

2. In the travelling cable two safety circuit cables are laid parallel. The open door contact separates them. The door contact separates the active (live) and inactive (not live) conductors.

In this context also all the other parallel laid cables (e.g. supply lines of the door drive) may be considered as active conductors. They lead to alternating voltage.

3. Capacitive coupling gives rise to electrical voltage on the inactive conductor. The voltage level depends on:

› level of input voltage (normally 230V/50Hz)
› geometry of the travelling cable (how long do the wires run parallel? What is the distance between them?)
› electrical load on the inactive conductor

Under all circumstances (worst case) the corresponding electric voltage must be lower than the switch-on voltage of an electrical safety device.

14.3.2 Application

The security device SA3-S has two safety circuit inputs. The status becomes dangerous, when the safety circuit switch is open but the security device (due to capacitive coupling) recognizes the closed safety circuit.

It is the installer‘s responsibility to verify during commissioning if capacitive coupling can lead to a dangerous state in the safety device.

An input (D5) is branched off from the end of the security circuit. At the end of the security circuit main and brake contactors are typically connected, so that the electrical load here is relatively high. Probably no dangerous capacitive coupling can be expected in this regard.

There are several possible circuit variants for the circuit of the door input of the safety device (see chapter „Installation and commissioning manual“).

In the variants 2, 3 and 4 the inactive conductor is connected directly to the main contactors (or via other closed safety circuit switches).

Here probably no dangerous capacitive coupling is expected. The inactive conductor in the variant 1 is connected only with the input of the safety device SA3-S. It has an integrated electrical load.

However it is lower than the load produced by the main contactor.

The safety device SA3-S switches the 230V-safety circuit, when power reaches or higher than 140V/50Hz (sinusoidal voltage). The switch-on point might vary with the temperature and other different ambient conditions.

The safety device SA3-S can detect whether capacitive coupling is available.

In this case both decimal point-LEDs of the display are switched on (this help function is **not** available on the external display modules of the first version).

The following procedur must be observed to ensure that no dangerous status of the lift system can occur:

Regarding capacitive coupling the lift technician must put the system in the worst possible state before any measurements are taken.

Normally, the car would be moved to the lowest floor for a measurement, for further measurement the car would be moved to the lowest floor. In each case open the car door and switch on all possible AC consumers (for example shaft light, car light etc.). All other safety circuit switches must be closed.

In this state it must be checked whether both decimal points of the display are off all the time, during they light with closed safety circuit. If this is the case, capacitive coupling is not available and the next step can be skiped.

If capacitive coupling is detected, the height of the coupling has to be measured: the AC voltage at both safety circuit inputs (C-6 and D-5) must be measured with a multi-meter against the N-wire (C-2 or D-2). It must be below the set threshold.

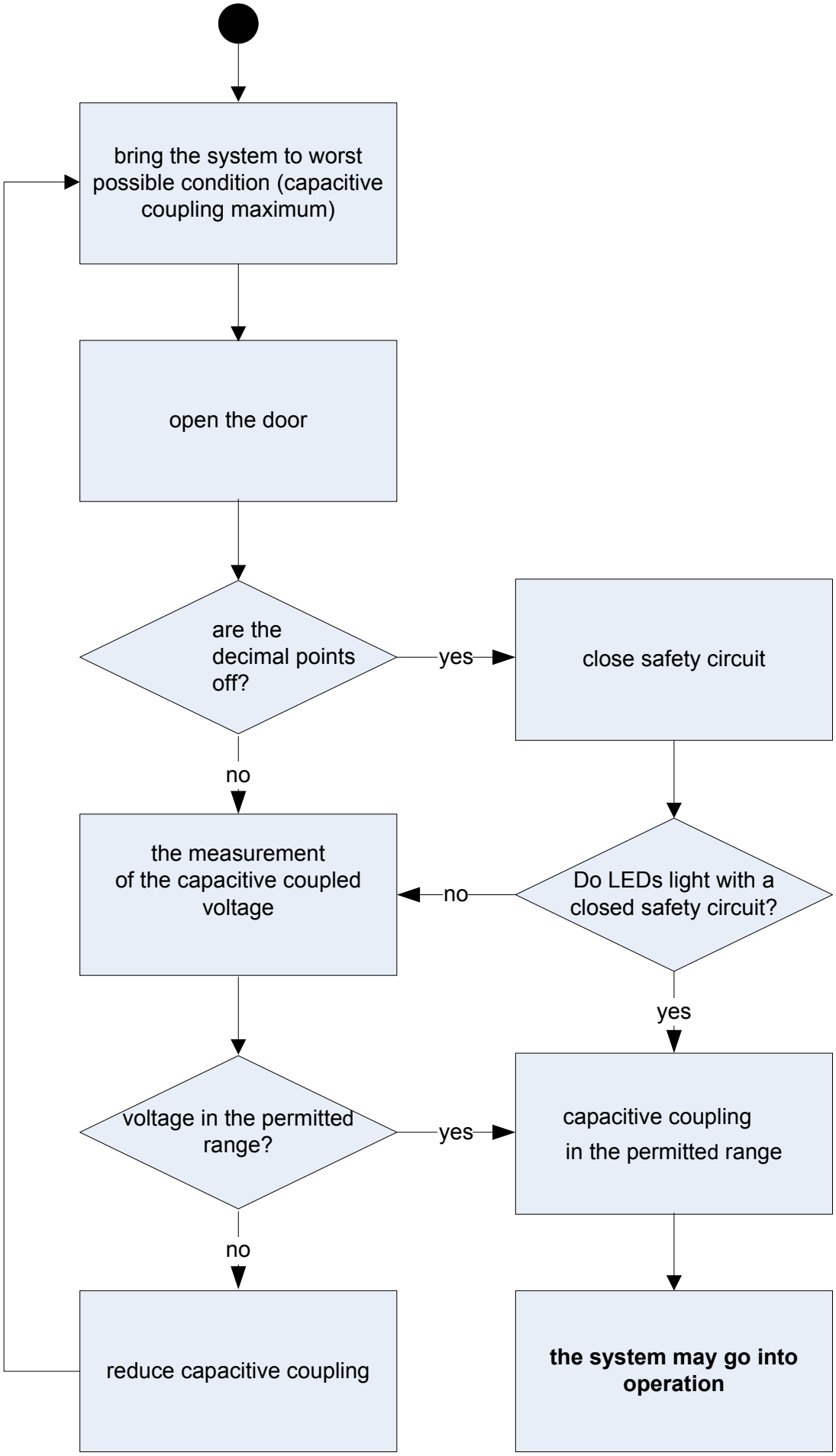
bring the system to worst possible condition (capacitive coupling maximum)
open the door
are the decimal points off?
yes
close safety circuit
no
the measurement of the capacitive coupled voltage
no
Do LEDs light with a closed safety circuit?
yes
voltage in the permitted range?
yes
capacitive coupling in the permitted range
no
reduce capacitive coupling
the system may go into operation

14.3.3 Avoidance

The following procedures help to avoid or to reduce capacitive coupling:

1. Do not put in the travelling or in the shaft cable leading and return line directly next to each other (the higher is the distance between the wires, the lower is the capacitive coupling).

2. Do not put in the travelling cable or in the shaft the return line directly next to other alternating voltage lines (the higher is the distance between the wires, the lower is the capacitive coupling).

3. For wiring of the security device SA3-S use if possible variants of circuit diagram 2, 3 or 4. The additional load of the contactor reduces further the capacitive coupled voltage.

15 Certificate of EU-Tape Examination

ZERTIFIKAT | CERTIFICATE | CERTIFICAT | CERTIFICADO | СЕРТИФИКАТ | شهادة | 证书 | 인증서

TÜV AUSTRIA

EU-Baumusterprüfbescheinigung

nach EU Richtlinie für Aufzüge 2014/33/EU

Certificate of EU-Type Examination

according EU Directive for Lifts 2014/33/EU

Produkt / *Product:* Elektrisches, elektronisches sowie programmierbares System für sicherheitsbezogene Anwendungen für Aufzüge
Electrical, electronic and programmable system for safety related applications for lifts

Type / *Type:* SA3-S

Antragsdatum / *Date of application:*
03.05.2016

Bescheinigungsnummer / *Certificate number:*
TÜV-A-AT-1-11-256CEES-6

Zugelassene Stelle / *Approved body:*
TÜV AUSTRIA SERVICES GMBH
Krugerstraße 16
A-1015 Wien
ID-Nr.: 0408

Bescheinigungsinhaber / *Certificate holder:*
NEW Lift Steuerungsbau GmbH
Lochhamer Schlag 8
82166 Gräfelfing, Deutschland

Prüfstelle / *Test laboratory:*
TÜV AUSTRIA SERVICES GMBH
Krugerstraße 16, A-1015 Wien

Hersteller / *Manufacturer:*
NEW Lift Steuerungsbau GmbH
Lochhamer Schlag 8
82166 Gräfelfing, Deutschland

Prüfgrundlage:
Basis of examination:
EN 81-1/2:1998 + A3:2009, F.6

Datum und Nummer des Prüfprotokolls:
Date and number of laboratory report:
2016-AT-EP/0064, 21.06.2016

Bemerkungen:
Remarks:
Das geprüfte Produkt erfüllt die Prüfgrundlagen im Rahmen des im Anhang 1 dieser Bescheinigung definierten Anwendungsbereichs.
The product fulfils the base of examination in the scope of application, defined in the annex 1 of this certificate.

Verbreitung dieser Bescheinigung nur im Ganzen mit Anhang 1 und darin angeführten Unterlagen.
Spread of this certificate allowed complete only with annex 1 and documents called there.

22.06.2016
Gültig ab
Valid from

Ing. Thomas Maldet
Zertifizierungsstelle
Certifying Department

TÜV AUSTRIA SERVICES GMBH
TÜV AUSTRIA

QFM-AT-035 Rev. 08

Seite / *Page:* 1/1

TÜV-A-AT-1-11-256CEES-6 – Anhang 1 / *Annex 1*

TÜV AUSTRIA

TÜV AUSTRIA SERVICES GMBH

Notified Body 0408

Anhang 1 zu / *Annex 1 to*
EU-Baumusterprüfbescheinigung / *Certificate of EU-Type Examination*
TÜV-A-AT-1-11-256CEES-6

Wien, 22.06.2016

Dieser Anhang wurde erstellt in: ☒ Deutsch / *German*
This annex has been issued in: ☒ Englisch / *English*

---

1. Anwendungsbereich / *Scope of application:*

1.1 Kurzbeschreibung/ *Short description*:

- Das elektrische, elektronische sowie programmierbare System SA3-S darf in Aufzugsanlagen gemäß EN 81-1 (Seilaufzüge) oder EN 81-2 (Hydraulikaufzüge) eingesetzt werden.

  The electrical, electronic and programmable system SA3-S may be used in lifts according to EN 81-1(traction drive lifts) or EN 81-2 (hydraulic lifts).

- Das Sicherheitssystem SA3-S besteht aus den Sensoren, der programmierbaren elektronischen Auswerteeinheit und den Aktoren. Außerdem werden verschiedene Signale, die die Aufzugsteuerung vorher direkt von den Sensoren erhalten hat, nun über das Sicherheitsgerät eingelesen und dann an die Aufzugsteuerung durchgereicht.

  The safety system SA3-S consists of sensors, the programmable electronic evaluation unit and the actuators. In addition, other signals than those, the lift controller has previously received directly from the sensors, are now read by the safety device and then passed on the lift controller.

- Bei dem hier beschriebenen Überwachungsgerät wird der Tür- und Verriegelungszustand über die Reihenschaltung der Schalter überwacht. Es muss sich hierbei, wie bisher, um zwangsöffnende Tür- und Verriegelungsschalter handeln, die für die Überwachung der Türschließstellung und die Überwachung der Verriegelungsstellung der Fahrkorbtüren bzw. Schachttüren zugelassen sind. Bei Variante Nr. 1 führt das Signal aus der Reihenschaltung der Tür- und Verriegelungsschalter allerdings nicht direkt zur Öffnung des Sicherheitskreises, sondern wird vom Überwachungsgerät eingelesen, das ein Sicherheitsrelais ansteuert, das als Ersatz für die Tür- und Verriegelungsschalter dient (Tür- und Verriegelungsstellungsnachbildung). Die Tür- und Verriegelungsstellungsnachbildung schaltet synchron zu den Tür- und Verriegelungsschaltern das Sicherheitsrelais, dessen Kontakte (Tür-Relais Ausgang C-1 und C-3) im Sicherheitskreis eingebunden werden. Dadurch ergibt sich für die Aufzugsteuerung kein Unterschied zur ursprünglichen Schaltung. Variante Nr. 2, 3 und 4 werden die Tür- und Verriegelungsschalter herkömmlich im Sicherheitskreis eingebunden.

TÜV AUSTRIA SERVICES GMBH TÜV AUSTRIA

TÜV-A-AT-1-11-256CEES-6 – Anhang 1 / *Annex 1*

TÜV AUSTRIA

Bei der Variante Nr. 4 ist die entsprechende Einbindung der Tür- und Verriegelungsschalter der Schachttüren gemäß Bild „Variante 4" auszuführen (Reihenfolge des Fahrkorbtürschalter nicht relevant). Obwohl in der EN 81 nicht gefordert, wird das Überwachungsgerät aktiv, wenn eine Fahrkorbtüre oder eine Schachttüre geöffnet ist. Dadurch wird verhindert, dass (z.B. bei Treibfähigkeitsverlust) der Fahrkorb mit geöffneten Schachttüren, aber geschlossenen Fahrkorbtüren die Haltestelle verlässt.

The described monitoring device monitors the status of the door and the door-locking, using the serial switch circuit. The door and door-lock switches must be of positive actuation type, as commonly used and which are permitted for the monitoring of the car and landing door-closed and door-locked conditions. In the case variant Nr. 1 the signal from the serial door and door-lock switch circuit does not open the safety circuit directly itself, but is read by the monitoring device and used to control a safety relay thereby replacing the door and door-lock safety switches (door and door-locking replication). The door and door-locking replication actuates synchronously to the door/door-locking switches the safety relay, which contacts (door relay outputs C-1 and C-3) are wired in the safety circuit. Through this arrangement, there is no difference for the lift controller between this and conventional operation. Variant Nr. 2, 3 and 4 the door and door-lock switch circuit is conventional connected to the safety circuit. In the case variant Nr. 4 the corresponding wiring of the door and door-lock must be according to picture "Variante 4" (The sequence of the car door switch is not relevant). Even thought, that this is not required in EN-81, the monitoring device is activated, when a car door or shaft door is opened. It is prevented that the car from leaving the landing when the landing door is open and the car door is closed (e.g. due to loss of traction).

- Folgende Grundanforderungen wurden definiert / *Following requirements were defined:*

  - <u>EN 81-1/2 Anhang F.6 / *EN 81-1/2 Annex F.6:*</u>

    Sicherheitsschaltungen mit elektronischen Bauelementen und/oder programmierbaren elektronischen Systemen (PESSRAL)

    Safety circuits containing electronic components and/or programmable electronic systems (PESSRAL)

  - <u>EN 81-1 Abschnitt 9.11 / *EN 81-1 Section 9.11:*</u>

    Aufzüge müssen mit einer Schutzeinrichtung zum Verhindern einer unbeabsichtigten Bewegung des Fahrkorbs von der Haltestelle weg, wenn die Schachttür nicht verriegelt und die Fahrkorbtür nicht geschlossenen ist, ausgestattet werden, die infolge eines Fehlers in einer für eine sichere Fahrkorbbewegung erforderlichen Komponente des Triebwerks- oder der Antriebssteuerung (Fehler an den Tragseilen oder -ketten und der Treibscheibe oder der Trommel oder den Kettenrädern des Triebwerks ausgenommen), auftreten kann.

    Lifts shall be provided with a means to stop unintended car movement away from the landing with the landing door not in the locked position and the car door not in the closed position, as a result of failure in any single component of the lift machine or drive control system upon which the safe movement of the car depends, except failure of the suspension ropes or chains and the traction sheave or drum or sprockets of the machine.

TÜV-A-AT-1-11-256CEES-6 – Anhang 1 / *Annex 1*

TÜV AUSTRIA

- EN 81-2 Abschnitt 9.13 / *EN 81-2 Section 9.13:*

  Hydraulische Aufzüge müssen mit einer Schutzeinrichtung zum Verhindern einer unbeabsichtigten Bewegung des Fahrkorbs von der Haltestelle weg, wenn die Schachttür nicht verriegelt und die Fahrkorbtür nicht geschlossenen ist, ausgestattet werden, die infolge eines Fehlers in einer für eine sichere Fahrkorbbewegung erforderlichen Komponente des Hydrauliksystems- oder der Antriebssteuerung (Fehler an den Tragseilen, Druckschläuchen, Rohrleitungen aus Stahl und Heber ausgenommen), auftreten kann.

  Hydraulic lifts shall be provided with a means to stop unintended car movement away from the landing with the landing door not in the locked position and the car door not in the closed position, as a result of failure in any single component of the hydraulic or drive control system upon which the safe movement of the car depends, except failure of the suspension ropes, flexible hoses, steel piping and cylinder.

- **Folgende Zusatzanforderungen wurden definiert / *Following additional requirements were defined:***

  - **Unbeabsichtigte Bewegung des Fahrkorbs von der Haltestelle weg bei geöffneter / geöffneten Fahrkorb- und / oder Schachttüre(n) auf Grund des Verlusts der Treibfähigkeit.**

    Unintended car movement away from the landing with the open car door(s) and / or landing door(s) due to loss of traction.

  - Überwachung der Beschleunigung > 6 m/s² des Fahrkorbs von der Haltestelle weg bei geöffneter / geöffneten Fahrkorb- und / oder Schachttüre(n) auf Grund z.B. eines Triebwerkswellenbruchs.

    Monitoring of the acceleration of > 6 m/s² of the car away from the landing with open car door(s) and / or landing door(s), e.g. due to failure of the shaft of the machine.

  - Überwachung der Geschwindigkeit beim Einfahren (0,8m/s) bei geöffneter / geöffneten Fahrkorb- und / oder Schachttüre(n).

    Monitoring the speed of levelling (0.8 m/s) with open car door(s) and / or landing door(s).

1.2 Das Sicherheitssystem SA3-S setzt sich aus folgenden Teilsystemen zusammen:
Safety system SA3-S consists of the following partial systems:

a. Sensoren (Sensor samt Magnetring, Sicherheitsrelais der Tür- und Verriegelungsstellungsnachbildung, Abgriffe Sicherheitskreis, Abgriffe der Türzonenschalter einer Sicherheitsschaltung gemäß 14.1.2.3).

Sensor (sensor complete with magnetic ring, door and door-locking replication safety relay, connections of the electric safety chain, connections of the door zone switches of the safety circuits according to 14.1.2.3):

HJ 200 Sensor / *Sensor:* Lika SGSD-Y-2-48-N-1 / Magnetring / *Magnet ring:* MRI/72J-54-4-50

HJ 250 Sensor / *Sensor:* Lika SGSD-Y-2-64-N-1 / Magnetring / *Magnet ring:* MRI/72J-50-4-50

HJ 300 Sensor / *Sensor:* Lika SGSD-Y-2-64-N-1 / Magnetring / *Magnet ring:* MRI/72J-60-3-50

TÜV-A-AT-1-11-256CEES-6 – Anhang 1 / *Annex 1*

TÜV AUSTRIA

Abgriffe des Sicherheitskreises Eingang: C-6 & D-5
Connection of the electric safety chain input:

Abgriffe der Türzonen Eingang: A-3 & A-8
Connection of the doorzone input:

b. Logik (Überwachungsgerät) / *Logic (monitoring device):*

Auswerteplatine / *Evaluate print*: SUB 0 10 1.3
Auswerteplatine / *Evaluate print:* SUB 0 10 1.4
Auswerteplatine / *Evaluate print*: SUB 0 10 1.5

c. Aktoren (Sicherheitsrelais im Sicherheitskreisende samt Diagnosekanal und Spule am Geschwindigkeitsbegrenzer samt Diagnosekanal):

***Actor (Safety relay positioned in the electric safety chain and together with** diagnostic channel and coil on the overspeed governor together with diagnostic channel):*

SHK-Relais Ausgang / *SHK-Relay output:* D-1 & D-3

Magnetspule Kendrion / *Magnetic coil Kendrion:* 19 oder/*or* 24VDC

Rückleseschalter der Magnetspule / *Diagnostic switch of the magnetic coil:* Jungblut 20KAS

d. Kabelverbindungen / *Cable connections:*

Kabel / *Cable:* ÖPVC-JZ / Elitronic LIYY
Stecker / *Plug:* Phoenix Contact

2. Bedingungen und Voraussetzungen / *Conditions and Preconditions:*

2.1 Die doppelt wirkende Fangvorrichtung für Auf- und Abwärtsrichtung muss den Anforderungen der EN 81-1:1998 + A3:2009 genügen.

The double acting safety gear for the upward and downward direction must meet the requirements of EN 81-1:1998 + A3:2009.

2.2 Wenn das Sicherheitssystem SA3-S für Hydraulikaufzüge gemäß EN 81-2 eingesetzt wird, muss eine der folgenden Voraussetzungen erfüllt werden:

If the safety system SA3-S is used for hydraulic lifts according to EN 81-2, one of the following requirements must be met:

a. Die doppelt wirkende Fangvorrichtung muss in Auf- und Abwärtsrichtung den Anforderungen der EN 81-2:1998 + A3:2009 genügen oder

The double acting safety gear for the upward and downward direction must meet the requirements of EN 81-2:1998 + A3:2009 or

b. Eine Fangvorrichtung in Abwärts-Richtung muss den Anforderungen der EN 81-2:1998 + A3:2009 genügen und der Geschwindigkeitsbegrenzer muss eine zwangsbetätigte Sicherheitseinrichtung gemäß 14.1.2 besitzen, welche in Aufwärtsrichtung nach Abfallen des Magneten und

TÜV-A-AT-1-11-256CEES-6 – Anhang 1 / *Annex 1*

TÜV AUSTRIA

anschließender Einrückung des Geschwindigkeitsbegrenzers anspricht und den Energiefluss des Bremselementes gemäß 9.13 unterbricht.

The safety gear must meet the requirements of EN 81-2:1998 + A3:2009 in the downwards direction and the overspeed governor must have a positively actuating safety device according to 14.1.2, which actuates in upwards direction after the magnet is released resulting in the engagement of the overspeed governor and interrupting the energy flow of the braking devices according to 9.13.

2.3 Die Verzögerungswerte fließen in die Berechnung des Bremswegs ein. Die Berechnung des Anhalteweges (Bremsfangvorrichtung) kann man dem Dokument „Inbetriebnahme und Wartung" entnehmen.

The retardation values are used for the calculation of the braking distance. The calculation of the braking distance (progressive safety) can be found in the document "Commissioning and Maintenance".

2.4 **Falls die Funktionen „Nachstellen bei offener Tür" bzw. „Einfahren bei offener Tür" gewünscht sind, muss die Aufzugsanlage über Türzonensensoren einer Sicherheitsschaltung gemäß EN 81 Abschnitt 14.1.2.3 verfügen. Ohne diese Sensoren verhindert das Überwachungsgerät jede Bewegung des Fahrkorbs mit offenen Türen, die über die normale Be- und Entladebewegung hinausgeht.**

If the functions "control of re-levelling with open door" or "control of levelling with open door" are required, the lift system must have door zone sensors, which shall be connected in such a way as to satisfy the requirements for safety circuits in 14.1.2.3. Without these door zone sensors, the monitoring device prevents any movement of the car with open doors, beyond the normal loading and unloading cycle.

2.5 Versorgungsspannung / *Supply voltage*: 24VDC

2.6 Sicherheitskreisspannung / *Safety circuit voltage*: 230 VAC / 50 Hz
110 VAC / 50 Hz
24 VDC bis / *up to* 150 VDC

2.7 Überspannungskategorie / *Overvoltage category*: III

2.8 Isolierstoffgruppe / *Isolation material group*: III

2.9 Inhomogenes Feld / *Inhomogeneous field*

2.10 Verschmutzungsgrad / *Degree of contamination*: 3

2.11 Es tritt leitfähige Verschmutzung auf oder trockene, nichtleitfähige Verschmutzung, die leitfähig wird, da Betauung zu erwarten ist.

Conductive contamination will occur or dry non-conductive contamination which will become conductive as condensation is expected.

2.12 Überlast-/Kurzschlussschutz des Sicherheitskreises:
Overload-/short circuit protection of the safety circuit: max. 4A

TÜV AUSTRIA SERVICES GMBH TÜV AUSTRIA

TÜV-A-AT-1-11-256CEES-6 – Anhang 1 / *Annex 1*

TÜV AUSTRIA

2.13	Schutzgrad / *Degree of protection:*	IP 64
2.14	Betriebstemperatur / *Operating temperature:*	0°C bis 65 °C
2.15	Relative Luftfeuchte Betrieb / *Operating Relative humidity:*	15 bis / *to* 85 % ohne Kondensation / *without condensation*
2.16	Lager- und Transporttemperatur / *Storage and transport temperature:*	-20°C bis / *to* 70°C
2.17	Relative Luftfeuchte Lager / Transport / *Storage / transport relative humidity:*	5 bis / *to* 95 % ohne Kondensation / *without condensation*
2.18	Luftdruck / *Air pressure:*	**1013 hPa bis / *up to* 800 hPa bis / *up to* 2000 m über / *over* NN**
2.19	Identifikationsnummer der Platine / *Identification number of PCB:*	SUB 0 10 1.3 (DC) SUB 0 10 1.4 / SUB 0 10 1.5 (AC)
2.20	Systemreaktionszeit / *System reaction time:*	82 ms
2.21	Software signature / *Software signature:*	EE76BE1F
2.22	Proof-Test-Intervall / *Proof-Test-Interval:*	20 Jahre / 20 *years*
2.23	Elektromagnetische Verträglichkeit / *Electromagnetic compatibility:*	EN 12015 und / *and* EN 12016
2.24	Vibrationsfestigkeit / *Vibration resistance:*	EN 81, Anhang F 6.3.1 / *EN 81, Annex F 6.3.1*
2.25	Kabellänge zur Steuerung / *Cable length to controller:*	max. 100 m (geschützte Verlegung / *protected installation*)
2.26	Kabellänge zum Geschwindigkeitsbegrenzer / *Cable length to overspeed governor:*	max. 100 m (geschützte Verlegung / *protected installation*)
2.27	Positionsauflösung HJ200 (Pulsabstand) / *Position resolution HJ200 (pulse interval):*	0,94 mm
2.28	Positionsauflösung HJ250 (Pulsabstand) / *Position resolution HJ250 (pulse interval):*	0,94 mm
2.29	Positionsauflösung HJ300 (Pulsabstand) / *Position resolution HJ300 (pulse interval):*	0,92 mm

TÜV-A-AT-1-11-256CEES-6 – Anhang 1 / *Annex 1*

TÜV AUSTRIA

2.30 Manueller Wiederanlauf / *Manual restart:*

Nach Auslösen einer Sicherheitsfunktion muss der sichere Zustand aufrechterhalten bleiben, bis der sichere Zustand für einen Wiederanlauf gegeben ist und die manuelle Rückstelleinrichtung (Quittierfunktion: Magnet oder Taster optional) betätigt wurde.

After the triggering of a safety function, the system must remain held in a secure state preventing further driving until a manual reset is performed (reset function: optional magnet or button).

2.31 Notbefreiungskanal: Override extern gegen GND kein Normalbetrieb
Emergency evacuation channel: Override externally to GND no normal operation.

2.32 Systematischer Ausfall / *Systematic failure:*

Grundlegende und bewährte Sicherheitsprinzipien, bewährte Bauteile, Maßnahmen zur Beherrschung systematischer Ausfälle, Maßnahmen zur Vermeidung systematischer Ausfälle (Organisation, Management und Technik) und Maßnahmen zur Vermeidung systematischer Ausfälle während der Integration (Organisation, Management und Technik) sind anzuwenden.

Basic and proven safety principles, proven components, measures to control systematic failures, measures to avoid systematic failures (organization, management and technology) and measures to avoid systematic failures during the integration (organization, management and technology) are applied.

2.33 Die entsprechenden Einzelkomponentengrenzwerte und deren Installationsrichtlinien sind einzuhalten.

The corresponding limits individual components and their installation guidelines are followed.

2.34 Das Dokument Inbetriebnahme und Wartung, die Baumusterprüfbescheinigung und die Konformitätserklärung ist dem elektrischen, elektronischen sowie programmierbaren System SA3-S beizulegen. Diese Dokumente dienen zur Prüfung vor der Inbetriebnahme, zur wiederkehrenden Prüfung, Prüfung nach wesentlichen Änderungen und nach einem Unfall.

The document commissioning and maintenance, the certificate of type examination and the declaration of conformity is the electrical, electronic and programmable system SA3-S enclosed. These documents are used for examinations and tests before putting into service, for periodical examinations and tests, examinations and tests after an important modification or after an accident.

TÜV-A-AT-1-11-256CEES-6 – Anhang 1 / *Annex 1*

TÜV AUSTRIA

3. Anmerkungen und Hinweise / *Remarks and advices:*

Folgende sicherheitsbezogene Anwendungen wurden analysiert und realisiert. Anhand von Gefahrenanalysen und anschließender Gefahrenbewertungen wurden die notwendigen Schutzniveaus ermittelt und durch die entsprechenden Spezifikationen erreicht.

The following safety-related applications have been analyzed and implemented. The required safety protection levels have been identified from risk analysis and subsequent risk assessments based on the appropriate specifications.

3.1 Zustandsüberwachung und Nachbildung der Überwachung der Verriegelung der Schacht- und Fahrkorbtüre nur für Variante Nr. 1.
Monitoring and replication of the locked status for the car and landing door only for variant Nr. 1.

SIL gefordert / *required*: 3 SIL erreicht / *reached*: 3

3.2 Zustandsüberwachung und Nachbildung der Überwachung der Schließstellung der Schacht- und Fahrkorbtüre nur für Variante Nr. 1.

Monitoring and replication of the closed status for the car and landing door only for variant Nr. 1.

SIL gefordert / *required*: 3 SIL erreicht / *reached*: 3

3.3 Erkennung einer unbeabsichtigten Bewegung des Fahrkorbs bei geöffneten Türen von der Haltestelle weg, Auslösung und Überwachung der Auslösung der Einrichtung, welche den Geschwindigkeitsbegrenzer für die Aufwärts- und Abwärtsfahrt einrückt, für Nr. 1, 2, 3 (Variante Nr. 3: Nur bei gleichzeitig bewegten gekuppelten Schacht- und Fahrkorbtüren) und 4 (Variante Nr.4: Nur bei Schachtdrehtüren und Fahrkorbschiebetüren).

Detection of unintended car movement away from the landing with open doors, the activation and monitoring thereof of the device resulting in engagement of the overspeed governor in the upwards and downwards direction for variant Nr.1, 2, 3 (Variant Nr. 3: Only in the case of coupled car and landing doors) and 4 (Variant Nr. 4: Only in the case of hinged landing doors and sliding car doors)

SIL gefordert / *required*: 2 SIL erreicht / *reached*: 2

4. Bilder, Diagramme, Skizzen, Zeichnungen / *Pictures, diagrams, sketches, drawings:*

Bitte siehe Folgeseite / *Please see following pages*

TÜV-A-AT-1-11-256CEES-6 – Anhang 1 / *Annex 1*

Variante 1:

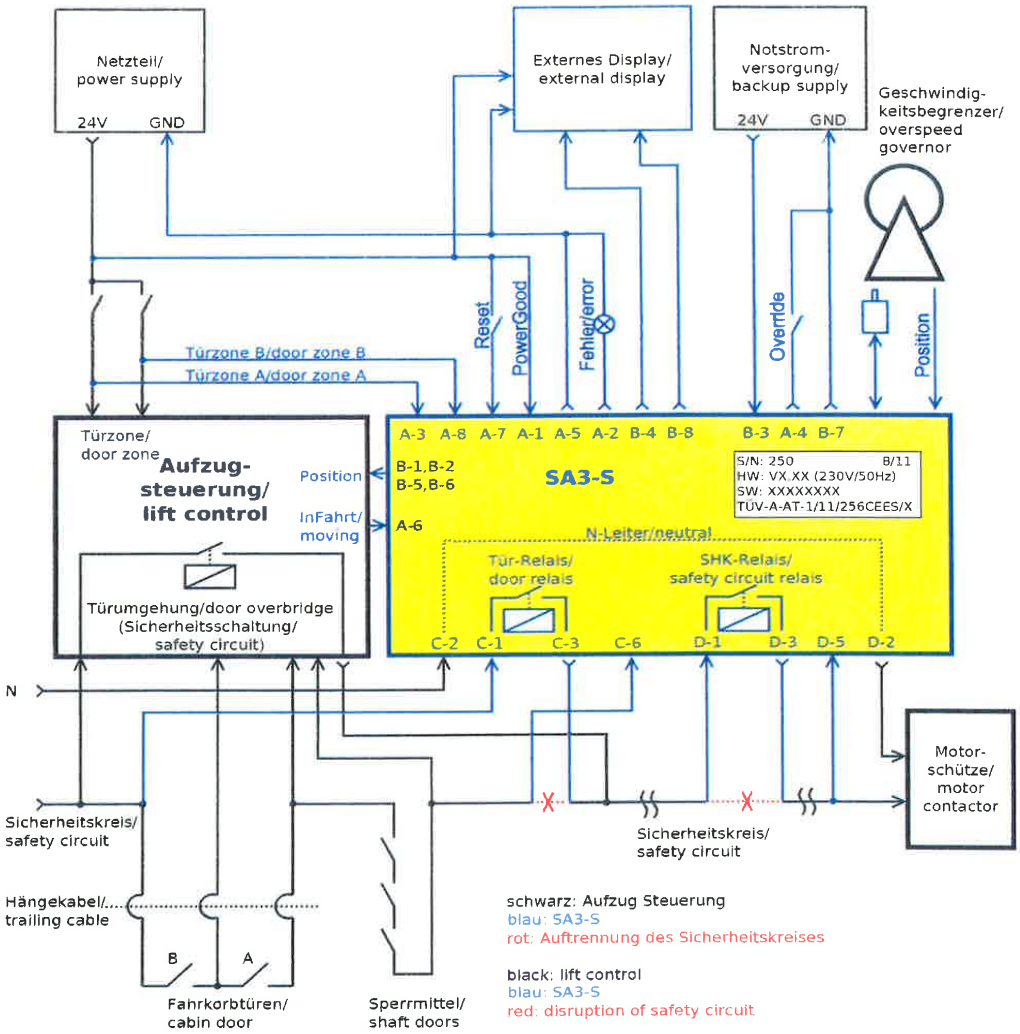

TÜV-A-AT-1-11-256CEES-6 – Anhang 1 / *Annex 1*

TÜV AUSTRIA

Variante 2:

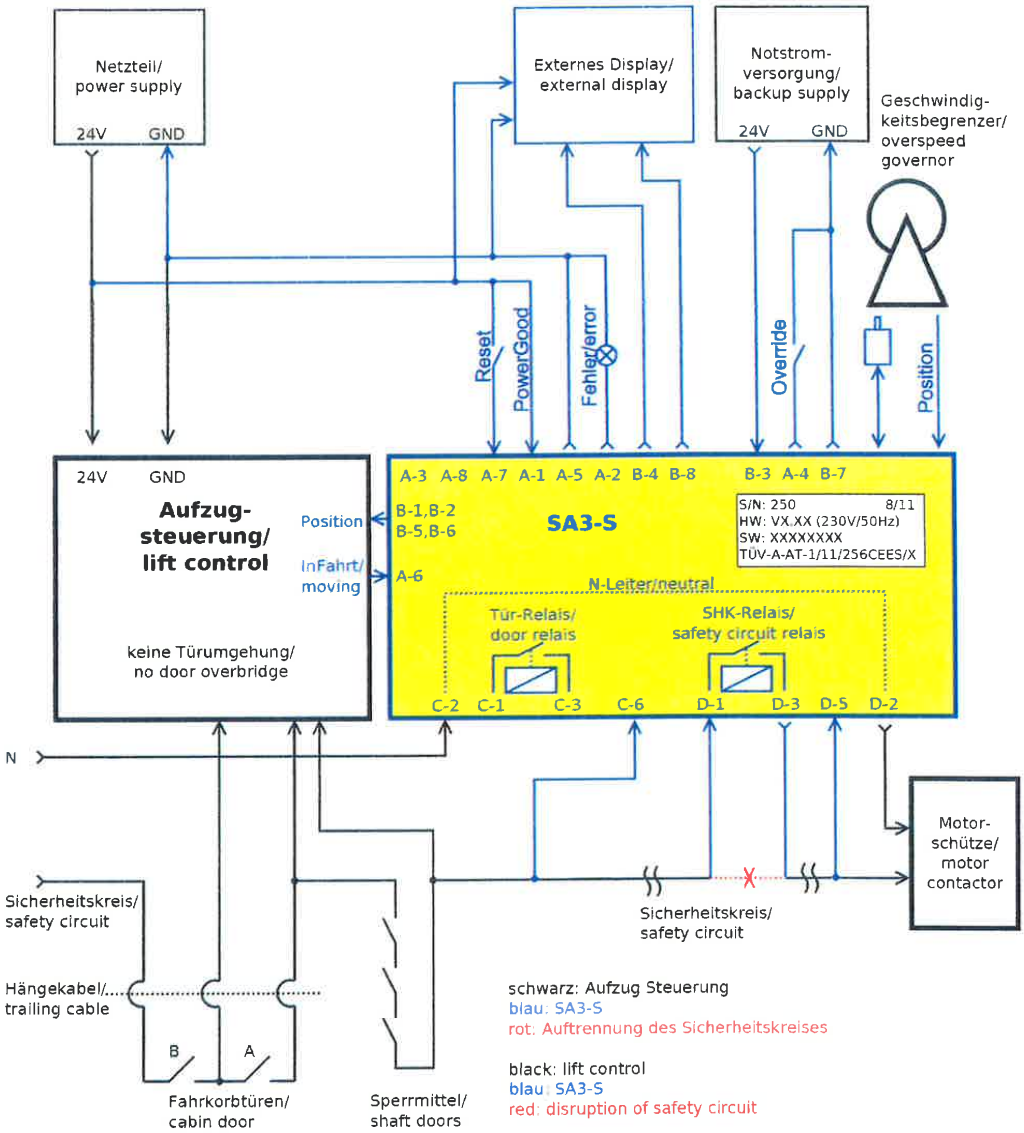

TÜV-A-AT-1-11-256CEES-6 – Anhang 1 / *Annex 1*

TÜV AUSTRIA

Variante 3:

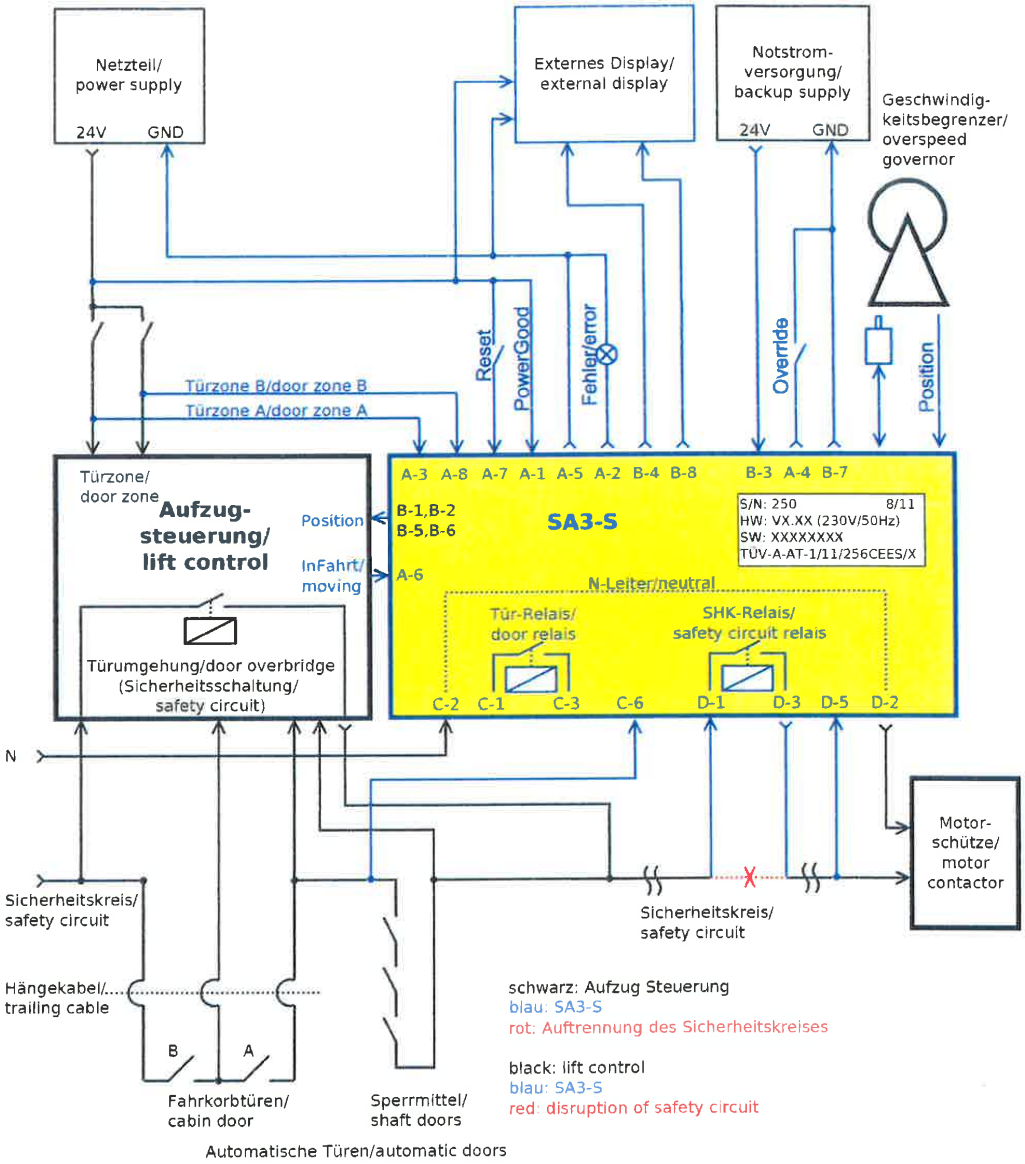

TÜV-A-AT-1-11-256CEES-6 – Anhang 1 / *Annex 1*

TÜV AUSTRIA

Variante 4:

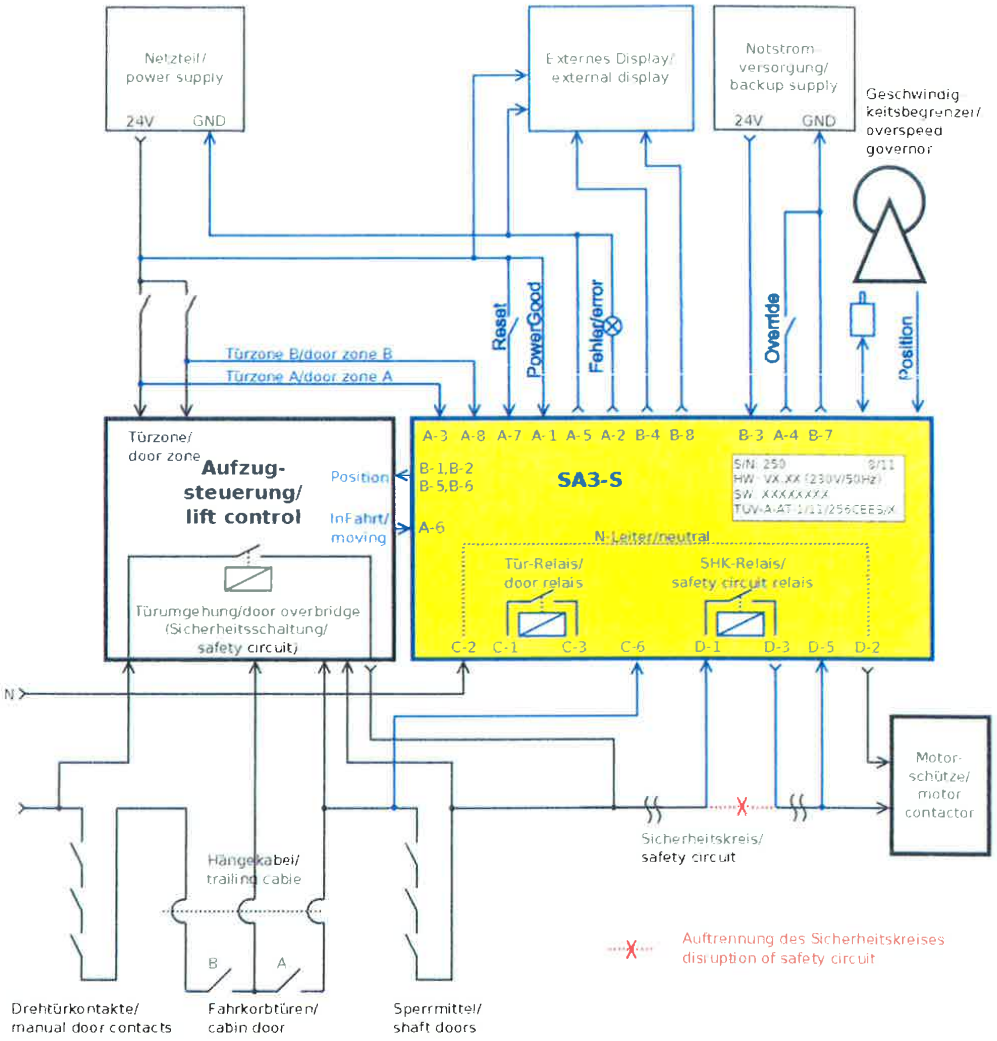

16 Declaration of conformity

NEW LIFT
NEUE ELEKTRONISCHE WEGE

EU Declaration of Conformity

According to the EU-directive

Product description:

A safety devise preventing unintentional movement of the car away from the landing, when the landing doors are not locked and the car door is not closed.

Device types: „SA3-S“ in all delivered versions

with the EC type-Examinator certificate Nr. TÜV-A-AT-1/11/256CEES/6, issued by TÜV Austria Services GmbH, ID-No.: CE0408.

Manufacturing control according to QM-System ISO 9001:2015 and ARL 2014/33/EU Annex VI is carried out by the Association for Technical Inspection (TÜV Rheinland Industrie Service GmbH, ID-No.: CE0035).

The named safety devise was developed, constructed and produced in accordance with the Council Directives on the approximation of the laws of the Member States.

- Low Voltage Directive 2014/35/EU
- EMV- Directive 2014/30/EU
- Lift Directive 2014/33/EU

The following standards were used to evaluate the safety device:

- EN 81 Part 1:1998 + A3 :2009 Annex F.6
- EN 81 Part 2:1998 + A3 :2009 Annex F.6
- EN 12015:2004
- EN 12016:2004 + A1:2008

There exists a complete technical documentation. The manual for the devices is available. The safety instructions of the delivered manual must be observed! This declaration confirms the conformity of the mentioned standards and directives. It does not, however, include a guarantee of characteristics.

Graefelfing, 20.04.2016

Legally binding signature:

Peter Zeitler, Managing Director

NEW *LIFT* Neue elektronische Wege Steuerungsbau GmbH
Lochhamer Schlag 8 - 82166 Graefelfing – Germany

Notes

NEW *LIFT*

NEUE ELEKTRONISCHE WEGE

NEW *LIFT* Steuerungsbau GmbH

Lochhamer Schlag 8
82166 Graefelfing

Tel +49 89 – 898 66 – 0
Fax +49 89 – 898 66 – 300
Mail info@newlift.de

Service line
Tel +49 89 – 898 66 – 110
Mail service@newlift.de

www.newlift.de