MANUAL

NEWLIFT
NEUE ELEKTRONISCHE WEGE

PM-1 PM-2
PB PA

Car operating panel modules

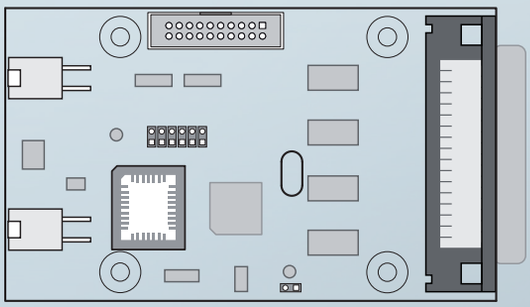

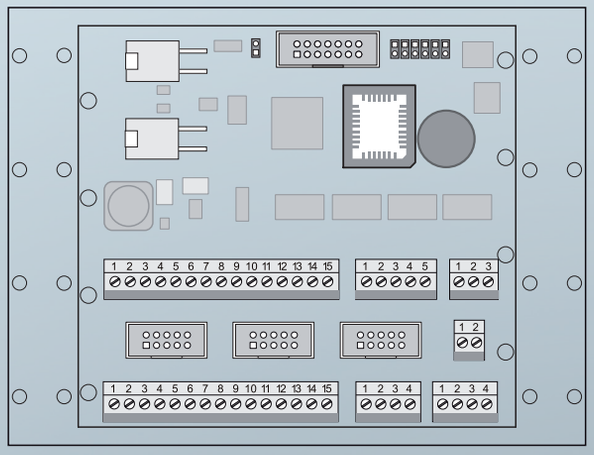

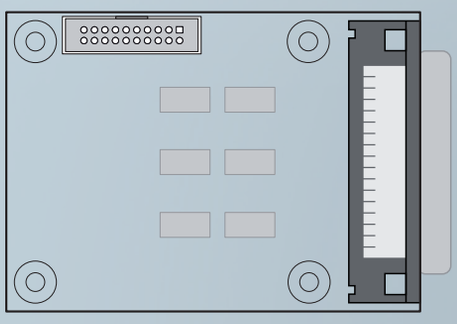

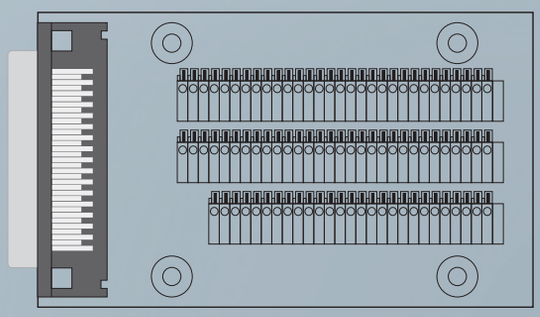

Manufacturer	NEW *LIFT* Neue elektronische Wege Steuerungsbau GmbH Lochhamer Schlag 8 82166 Gräfelfing Tel +49 89 – 898 66 – 0 Fax +49 89 – 898 66 – 300 Mail info@newlift.de www.newlift.de
Service line	Tel +49 89 – 898 66 – 110 Mail service@newlift.de

Date of issue	24.11.2011
Author	KH / TB
Last Change	19.11.2020 AME
Release	19.11.2020 AL
Hardware version	FPM-1: V2.0 / FPM-2: V2.2 / FPE: 1.1 / FPA: 1.8
Software version	FPM-1 V60 / FPM-2 V20
Doc. No.	hb_FPM_2020-07_en

Contents

1 About this manual

This manual contains all information on the FPM-2, FPM-1, FPE and FPA car operating panel modules.

1.1 Abbreviations, characters and symbols used

Symbol / abbreviation	Meaning
FPA	Car operating panel adapter; replaces the 50-pin round cable for the car operating panel wiring
FPE	Car operating panel extension; expands the car operating panel module to include the support of the car call from floors 16 to 63
FPM	Car operating panel module; controls the equipment of the car operating panel.
✶	**Delivery condition** Settings that are supplied as standard are marked with an asterisk ✶.
P	Power
I	Input
O	Output
L	low active
H	high active
▶	**Operational instructions** Perform the tasks that follow this symbol in the specified order.
⚠	***Warning notice*** This symbol is located in front of safety-relevant information
ⓘ	***Information notice*** This symbol is located in front of relevant information.

1.2 Notation

Notation	Meaning
Bold	› Designations of switches and actuators › Input values
Italics	› Captions › Cross references › Designations of functions and signals › Product names
Bold italics	› Remarks
LCD font	› System messages of the controller

1.3 Further information

The following documents, among others, are available for the FST control system and its components:

› ADM manual
› EAZ TFT.45.110.210 manual
› EAZ-256 manual
› EN81-20 manual
› FST-2XT/s manual
› FST-2XT MRL manual
› FST Installation & Commissioning manual
› GST-XT manual
› LCS manual
› RIO manual
› SAM manual
› UCM-A3 manual
› Update-Backup-Analysis manual

These and other up to date manuals can be found in the download area of our website at https://www.newlift.de/downloads-311.html

1.4 How to contact us

If, after referring to this manual, you still require assistance, our service line is there for you:

Phone +49 89 – 898 66 – 110
E-mail service@newlift.de

Mon. - Thurs.: 8:00 a.m. – 12:00 p.m. and 1:00 p.m. – 5:00 p.m.
Fr: 8:00 a.m. – 3:00 p.m.

2 Safety

2.1 General safety regulations

The car operating panel modules must only be operated in perfect working condition in a proper manner, safely and in compliance with the instructions, the valid accident prevention regulations and the guidelines of the local power company.

This manual is a supplement to the FST manual and the FST Installation and Commissioning manual whose safety guidelines must always be observed.

2.2 Applicable standards and guidelines

All car operating panel modules comply with:

› the safety guidelines for the construction and installation of passenger and goods passenger lifts (DIN EN 81 Part 1 and 2).

› the conditions for the erection of low voltage installations with nominal voltages up to 1 kV (DIN VDE 0100).

› the contact protection measures in the machine room (VDE 0106).

› the data sheet on safety measures for the installation, maintenance and commissioning of lift systems (ZH 1/312).

2.3 Electromagnetic compatibility (EMC)

An accredited inspection authority has inspected the FST control system and its components in accordance with the standards, thresholds and severity levels named in EN 12015/1995 and EN 12016/1995.

The FST control system and its components are:

› immune to electrostatic discharge (EN 61000-4-2/1995)

› immune to electrostatic fields (EN 61000-4-3/1997)

› immune to fast transient disturbances (EN 61000-4-4/1995)

The electromagnetic disturbance field strengths created by the FST control system and its components do not exceed the permissible thresholds. (EN 55011/1997).

2.4 Handling electronic assemblies

› Keep the electronic assembly in its original packaging until installation.

› Before opening the original packaging, a static discharge must be performed. To do this, touch a grounded piece of metal.

› During work on electronic assemblies, periodically perform this discharge procedure.

› All bus inputs and outputs not in use must be equipped with a terminal resistor (terminator).

3 FPM-1

The FPM-1 car operating panel module forms the interface between the car operating panel and the FST control system. An FPM-1 supports up to 16 car calls. The FPM-1 is connected to the FST via the LON bus. The FPM-1 is either assembled in the car top box or in the car operating panel.

3.1 Technical data

Description	Value
Supply voltage	24 V DC ±10%
Typical power consumption	60 mA
Outputs	Short circuit-proof
Length x height x depth (+x: additional distance for cable)	71 x 126 (+40) x 20 mm
Minimum mounting distance (use spacer sleeves)	8 mm
Bolts	M3 x 20 mm
Temperature range: Storage & transport / operation	-20 – +70 °C / ±0 – +60 °C
Relative humidity: Storage & transport / operation (non-condensing)	+5 – +95 % / +15 – +85 %

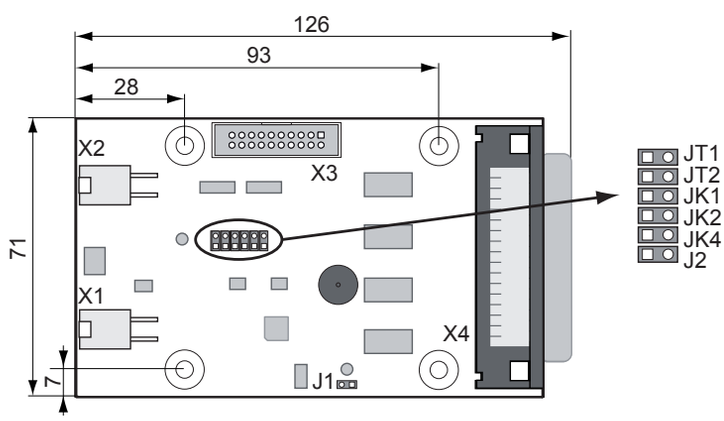

FPM-1_V2 circuit board marking

The new version V2.x of the control board FPM-1 has the same function of jumper such as V1.x, a buzzer has been added here. This can be used with the same functions as the buzzer of the FPM-2.

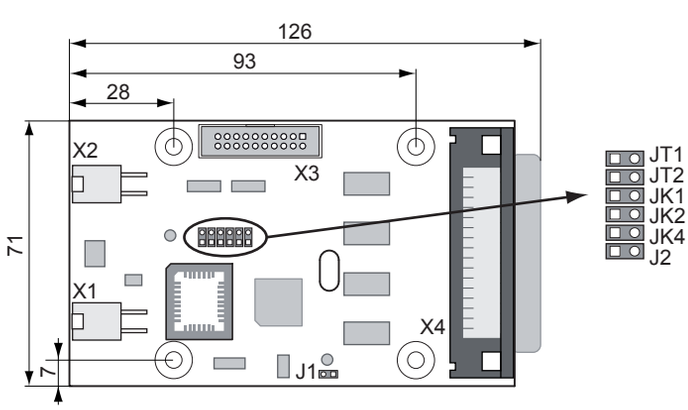

FPM-1 circuit board marking

3.2 Terminal assignment and configuration

3.2.1 Bus connection X1 ... X2

FPM-1 X1 / X2	Colour	LON bus car
Pin 1	black	Bus signal A
Pin 2	white	Bus signal B
Pin 3	red	+24 V
Pin 4	violet	GND

3.2.2 Jumpers

Door side assignment

In „single door mode“, the car call of the car panel module are assigned using the jumpers on one door side (A, B or C). If jumper J2 is plugged in, the FPM-1 is in the so-called „dual door mode,“ i.e. an FPM-1 can process car calls for door sides A and B.

If there are three car doors, a separate FPM-1 is always required for door side C.

Car door assignment	Mode	JT1	JT2	J2
Door A	single door mode	open	open	open
Door B	single door mode	plugged	open	open
Door C	single door mode	open	plugged	open
Door A+B	dual door mode	open	open	plugged
Door A + B (fireman input X4.4 and loading button X4.34 act on door B.)	dual door mode	open	plugged	plugged
Door B + A (calls A and B switched)	dual door mode	plugged	open	plugged

FST or car assignment

FST / car assignment	Operating mode	JK1	JK2	JK4
FST A	single or group mode	open	open	open
FST B	group mode	plugged	open	open
FST C	group mode	open	plugged	open
FST D	group mode	plugged	plugged	open
FST E	group mode	open	open	plugged
FST F	group mode	plugged	open	plugged
FST G	group mode	open	plugged	plugged
FST H	group mode	plugged	plugged	plugged

Car assignments of the FSM-2 car control module and the FPM-1 car panel module must be identical.

Free jumper

The service jumper J1 is not plugged in.

3.2.3 Terminals and sockets

FPM-1 X3

An FPE can be connected to the FPM-1 via the X3 plug.

FPM-1: X3	Car call extension
1	+ 24 V
2	+ 24 V
3	+ 5 V
4	+ 5 V
5	Reset of SPI drivers
6	GND
7	Serial cycle
8	GND
9	Serial output
10	GND
11	Serial input
12	GND
13	SPI select 3 (car call 48..63)
14	GND
15	SPI select 2 (car call 32..47)
16	GND
17	SPI select 1 (car call 16..31)
18	GND
19	FPE detection
20	GND

FPM-1 X4

The colour code given in the following table corresponds to the 50-pin standard cable for the car operating panel wiring. Other colour codes can be used according to the specific order.

FPM-1: X4	Colour code	Car operating panel signals in "single door mode"	Car operating panel signals in "dual door mode"	Technical data
1	wh	"Ventilator ON" button	"Ventilator ON" button	I; L
2	br	Door close button B	Door close button B	I; L
3	gn	Door close button A	Door close button A	I; L
4	ye	Key switch fireman service	Key switch fireman service	I; L
5	gr	Display 2 *	Display 2 *	I/O; L 250 mA / 24 V
6	pk	Overload display	Overload display	I/O; L 250 mA / 24 V
7	bl	Direction UP	Direction UP	I/O; L 250 mA / 24 V
8	rd	+ 24 V	+ 24 V	P
9	bk	Position indicator 6	Position indicator 6	I/O; L 250 mA / 24 V
10	pr	Position indicator 3	Position indicator 3	I/O; L 250 mA / 24 V
11	gr pk	Position indictor 0 (LSB)	Position indictor 0 (LSB)	I/O; L 250 mA / 24 V
12	rd bl	Car call 15	Car call 07 door side B	I/O; L 250 mA / 24 V
13	wh gn	Car call 12	Car call 04 door side B	I/O; L 250 mA / 24 V
14	br gn	Car call 09	Car call 01 door side B	I/O; L 250 mA / 24 V

FPM-1: X4	Colour code	Car operating panel signals in "single door mode"	Car operating panel signals in "dual door mode"	Technical data
15	wh ye	Car call 06	Car call 06 door side A	I/O; L 250 mA / 24 V
16	ye br	Car call 03	Car call 03 door side A	I/O; L 250 mA / 24 V
17	wh gr	Car call 00	Car call 00 door side A	I/O; L 250 mA / 24 V
18	gr br	GND	GND	P
19	wh pk	GND	GND	P
20	pk br	GND	GND	P
21	wh bl	GND	GND	P
22	br bl	+ 24 V	+ 24 V	P
23	wh rd	+ 24 V	+ 24 V	P
24	br rd	+ 24 V	+ 24 V	P
25	wh bk	Position indicator 7 (MSB)	Position indicator 7 (MSB)	I/O; L 250 mA / 24 V
26	br bk	Position indicator 4	Position indicator 4	I/O; L 250 mA / 24 V
27	gr gn	Position indicator 1	Position indicator 1	I/O; L 250 mA / 24 V
28	ye gr	Car call release	Car call release	O; L 250 mA / 24 V
29	pk gn	Car call 13	Car call 05 door side B	I/O; L 250 mA / 24 V
30	ye pk	Car call 10	Car call 02 door side B	I/O; L 250 mA / 24 V
31	gn bl	Car call 07	Car call 07 door side A	I/O; L 250 mA / 24 V
32	ye bl	Car call 04	Car call 04 door side A	I/O; L 250 mA / 24 V
33	gn rd	Car call 01	Car call 01 door side A	I/O; L 250 mA / 24 V
34	ye rd	Landing control OFF or "loading control" button (see FST manual)		I; L
35	gn bk	Door open button B or partition door button (see FST manual)		I; L
36	ye bk	Door open button A	Door open button A	I; L
37	gr bl	Key switch car priority	Key switch car priority	I; L
38	pk bl	Display 1 *	Display 1 *	I/O; L 250 mA / 24 V
39	gr rd	Display 0 *	Display 0 *	I/O; L 250 mA / 24 V
40	pk rd	Direction DOWN	Direction DOWN	I/O; L 250 mA / 24 V
41	gr bk	GND	GND	P
42	pk bk	Position indicator 5	Position indicator 5	I/O; L 250 mA / 24 V
43	bl bk	Position indicator 2	Position indicator 2	I/O; L 250 mA / 24 V
44	rd bk	Secondary car call release (e.g. active with card readers in car)		I/O; L 250 mA / 24 V
45	wh br bk	Car call 14	Car call 06 door side B	I/O; L 250 mA / 24 V
46	ye gn bk	Car call 11	Car call 03 door side B	I/O; L 250 mA / 24 V
47	pk gr bk	Car call 08	Car call 00 door side B	I/O; L 250 mA / 24 V
48	bk bl rd	Car call 05	Car call 05 door side A	I/O; L 250 mA / 24 V
49	wh gn bk	Car call 02	Car call 02 door side A	I/O; L 250 mA / 24 V
50	gn br bk	+ 24 V	+ 24 V	P

* see FST2XT-XTs manual „5.5.5 Display 0 ... 2“

3.2.4 LED‘s

LED	Colour	State	Description
LD1	yellow	flashes briefly	FPM-1 ready
		flashing or permanently illuminated	hardware error
LD2	green	On	supply voltage (+5 V) is present

4 FPM-2

The FPM-2 is an I/O component of the FST which controls the input and output signals in the car. In addition, it implements the emergency light according to EN81-1/2 as well as the acoustic button acknowledgement according to EN81-70.

The car operating panel module is looped in the bus via the two bus connectors X11 and X12 and is also connected to the data bus with 24V.

The following inputs/outputs are supported by the module:

- 24V inputs for fireman service, car priority and loading mode (reconfigurable)
- 24V/0.2A I/Os for 16 car calls with two releases (primary and secondary)
- 3 outputs with 24V/0.2A (4W); fire indicators, overload and reserve
- 2 outputs for direction indicators, each with 24V/0.2A (max. 4 Watt)
- Four inputs for two doors (A/B), each with a door open and a door close button

All inputs and outputs are low active! All outputs are protected against short circuit!

The EAZ-256.64.FPM-2 position indicator can be connected to the X-5 14-pin pin header (NEW internal SPI connection) (*see chapter „4.3 Connection of an EAZ-256/64.FPM-2“ on page 17*), since it does not have any of its own LON nodes. The installation position of this position indicator is defined with the V jumper.

The FPM-2 has no outputs for floor position outputs so that only active LON modules can be used as position indicators in addition to the aforementioned EAZ-256.64.FPM-2 position indicator.

The acoustic button acknowledgement according to EN81-70 is already integrated on the FPM-2 module and does not need to be led to the terminals. It can be switched on or off via the FST menu (as of software version FST V1.100-0374). The Piezo buzzer, which realises the button acknowledgement, is used simultaneously to signal different special conditions (overload, chemical carrier, ...).

Both the primary and secondary releases are also separately led to the X6 terminal in order to connect card readers or key switches for implementing access controls.

The FPM-2 is delivered assembled in a type MA9999 luminous panel from SCHÄFER. The company logo, information about load capacity, maximum number of persons, year of manufacture, serial number and information for the case of fire can be inserted as a printed slide between the transparent front and the white diffuse cover of the luminous panel.

For emergency lighting: Four white LED‘s on the back of the FPM-2 module illuminate the text field as soon as the car lighting fails.

4.1 Technical data

Description	Value
Supply voltage	24 V DC ±10%
Typical power consumption	60 mA
Outputs	Short circuit-proof
Length x height x depth	143 x 108 x 44 mm
Bolts	M3 x 12 mm
Preview window aperture	99.1 x 99.1 mm; r = 2.8 mm
Temperature range: Storage & transport / operation	-20 – +70 °C / ±0 – +60 °C
Relative humidity: Storage & transport / operation (non-condensing)	+5 – +95 % / +15 – +85 %

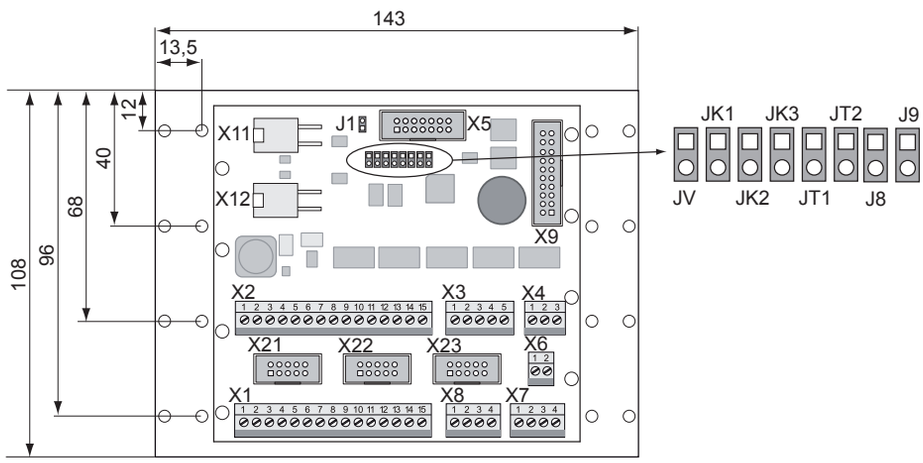

FPM-2_V2 circuit board marking

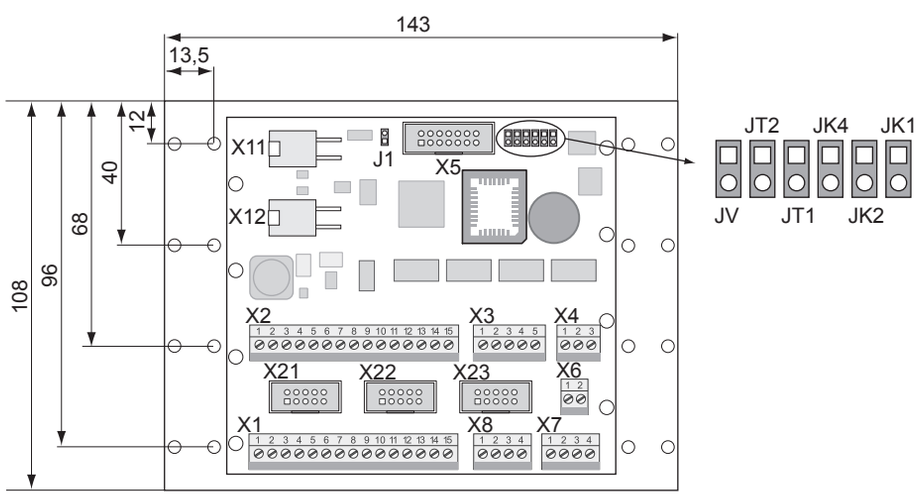

FPM-2 circuit board marking

4.2 Terminal assignment and configuration

4.2.1 Bus connection X11 ... X12

FPM-2 X11 / X12	Cable colour	Designation
1	black	RS-485 LON Bus A
2	white	RS-485 LON Bus B
3	red	+24 V
4	violet	GND or 0V

4.2.2 Jumpers

FST or car assignment

FST / car assignment	Operating mode	JK1	JK2	JK3
FST A ✶	single or group mode	open	open	open
FST B	group mode	plugged	open	open
FST C	group mode	open	plugged	open
FST D	group mode	plugged	plugged	open
FST E	group mode	open	open	plugged
FST F	group mode	plugged	open	plugged
FST G	group mode	open	plugged	plugged
FST H	group mode	plugged	plugged	plugged

Door side assignment

Car door assignment	Door mode	JT1	JT2
Door A ✶	single door mode	open	open
Door B	single door mode	plugged	open
Door C	single door mode	open	plugged
Door A+B	dual door mode	plugged	plugged

Installation position of the EAZ-256.64

Installation position EAZ-256.64	JV
Vertical installation position	plugged ✶
Horizontal installation position	open

The jumpers J8 and J9 are not in use yet.

4.2.3 Terminals and terminal strips

Depending on whether you would like to operate the car in single or dual door mode, the functions of the individual pins of the X1 and X2 terminals as well as associated terminal strips X21, X22 and X23 change. The following table contains an overview of the respective functions:

FPM-2 X1	Function single door mode	Function dual door mode	Connected to	Technical data
1	+24V	+24V	FPM-2 X21.10	P
2	Car call 00	Car call 00 A	FPM-2 X21.1	I/O; L; 250 mA / 24 V
3	Car call 01	Car call 01 A	FPM-2 X21.2	I/O; L; 250 mA / 24 V
4	Car call 02	Car call 02 A	FPM-2 X21.3	I/O; L; 250 mA / 24 V
5	Car call 03	Car call 03 A	FPM-2 X21.4	I/O; L; 250 mA / 24 V
6	Car call 04	Car call 04 A	FPM-2 X21.5	I/O; L; 250 mA / 24 V
7	Car call 05	Car call 05 A	FPM-2 X21.6	I/O; L; 250 mA / 24 V
8	Car call 06	Car call 06 A	FPM-2 X21.7	I/O; L; 250 mA / 24 V
9	Car call 07	Car call 07 A	FPM-2 X21.8	I/O; L; 250 mA / 24 V
10	Car call release 01	Car call release 01	FPM-2 X21.9	O; L; 250 mA / 24 V
11	Door open button	Door open button A	FPM-2 X23.1	I/O; L; 250 mA / 24 V
12	Door close button	Door close button A	FPM-2 X23.2	I/O; L; 250 mA / 24 V
13	Key switch car priority	Key switch car priority	FPM-2 X23.7	I; L; 250 mA / 24 V
14	"Ventilator ON" button	"Ventilator ON" button	FPM-2 X23.5	I; L; 250 mA / 24 V
15	GND	GND	FPM-2 X23.9	P

FPM-2 X2	Function single door mode	Function dual door mode	Connected to	Technical data
1	+24V	+24V	FPM-2 X22.10	P
2	Car call 08	Car call 00 B	FPM-2 X22.1	I/O; L; 250 mA / 24 V
3	Car call 09	Car call 01 B	FPM-2 X22.2	I/O; L; 250 mA / 24 V
4	Car call 10	Car call 02 B	FPM-2 X22.3	I/O; L; 250 mA / 24 V
5	Car call 11	Car call 03 B	FPM-2 X22.4	I/O; L; 250 mA / 24 V
6	Car call 12	Car call 04 B	FPM-2 X22.5	I/O; L; 250 mA / 24 V
7	Car call 13	Car call 05 B	FPM-2 X22.6	I/O; L; 250 mA / 24 V
8	Car call 14	Car call 06 B	FPM-2 X22.7	I/O; L; 250 mA / 24 V
9	Car call 15	Car call 07 B	FPM-2 X22.8	I/O; L; 250 mA / 24 V
10	Car call release 02	Car call release 02	FPM-2 X22.9	O; L; 250 mA / 24 V
11	Door open button	Door open button B	FPM-2 X23.3	I; L; 250 mA / 24 V
12	Door close button	Door close button B	FPM-2 X23.4	I; L; 250 mA / 24 V
13	Key switch fireman service	Key switch fireman service	FPM-2 X23.6	I; L; 250 mA / 24 V
14	Pin 34 function	Pin 34 function	FPM-2 X23.8	I; L; 250 mA / 24 V
15	GND	GND	FPM-2 X23.9	P

FPM-2 X3	Designation	Technical data
1	+24V	P
2	Display 1 *	O; L; 250 mA / 24 V
3	Display 2 *	O; L; 250 mA / 24 V
4	Display 0 *	O; L; 250 mA / 24 V
5	GND	P

* see FST2XT-XTs manual „5.5.5 Display 0 ... 2“

FPM-2 X4	Designation	Technical data
1	Direction UP	O; L; 250 mA / 24 V
2	Direction DOWN	O; L; 250 mA / 24 V
3	+24V	P

FPM-2 X6	Designation	Technical data
1	Car call release 01	O
2	Car call release 02	O

FPM-2 X7 FPM-2 X8	Designation	Technical data
1	Emergency light	P
2	GND	P
3	Emergency call (COM)	
4	Emergency call (NC)	

The EAZ-256.64 can be connected to the FPM-2 X5. This EAZ does not then require its own LON nodes.

The LON bus is connected to X11 and X12 with the usual 4-pin bus connector.

The following pin headers X21, X22 and X23 serve for the connection of the so-called HUNIOLIFT buttons by means of a 10-pin ribbon cable.

FPM-2 X21	Designation	Technical data
X21.1	Car call 00	I/O; L; 250 mA / 24 V
X21.2	Car call 01	I/O; L; 250 mA / 24 V
X21.3	Car call 02	I/O; L; 250 mA / 24 V
X21.4	Car call 03	I/O; L; 250 mA / 24 V
X21.5	Car call 04	I/O; L; 250 mA / 24 V
X21.6	Car call 05	I/O; L; 250 mA / 24 V
X21.7	Car call 06	I/O; L; 250 mA / 24 V
X21.8	Car call 07	I/O; L; 250 mA / 24 V
X21.9	Car call release 01	O; L; 250 mA / 24 V
X21.10	+24V	P

FPM-2 X22	Designation	Technical data
X22.1	Car call 08	I/O; L; 250 mA / 24 V
X22.2	Car call 09	I/O; L; 250 mA / 24 V
X22.3	Car call 10	I/O; L; 250 mA / 24 V
X22.4	Car call 11	I/O; L; 250 mA / 24 V
X22.5	Car call 12	I/O; L; 250 mA / 24 V
X22.6	Car call 13	I/O; L; 250 mA / 24 V
X22.7	Car call 14	I/O; L; 250 mA / 24 V
X22.8	Car call 15	I/O; L; 250 mA / 24 V
X22.9	Car call release 01	O; L; 250 mA / 24 V
X22.10	+24V	P

FPM-2 X23	Designation	Technical data
X23.1	Door open button A	I; L; 250 mA / 24 V
X23.2	Door close button A	I; L; 250 mA / 24 V
X23.3	Door open button B	I; L; 250 mA / 24 V
X23.4	Door close button B	I; L; 250 mA / 24 V
X23.5	Fan	I; L; 250 mA / 24 V
X23.6	Fire recall	I; L; 250 mA / 24 V
X23.7	Priority	I; L; 250 mA / 24 V
X23.8	Loading	I; L; 250 mA / 24 V
X23.9	GND	P
X23.10	+24V	P

The acoustic acknowledgement is already integrated on the FPM-2 assembly and does not need to be led to the terminals.

Emergency light function: As soon as the supply voltage of the car lighting fails, four white LEDs illuminate the text field.

4.3 Connection of an EAZ-256/64.FPM-2

With the EAZ-256/64.FPM-2, NEW LIFT offers a low-cost variant of the EAZ-256/64 position indicator. The position indicator and the car operating panel module form an optically uniform system.

For the functional text, the EAZ-256.64.FPM-2 must be connected to the FPM-2 via the X5 pin header using the 14-wire ribbon cable.

The maximum length of ribbon cable conntected to X5 must not exceed 0,25m.

From 0,25m to 1,5m the use of the CLF-module (art. no.: 37-02150) is additionally required. It is not possible to use the cable longer than 1,5m, use alternatively a LON EAZ.

If the following pattern is displayed on the screen after the FPM-2 supply voltage has been switched on via bus connector X11 or X12, there is no bus connection.

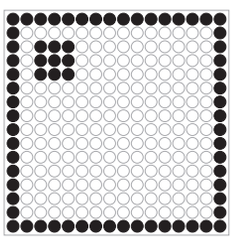

Display for checking the function

5 FPE

The FPE is the extension of the FPM-1. The module is connected to the FPM-1 car operating panel module via FPE X3. This means the car calls for floors 16 to 63 are supported.

5.1 Technical data

Description	Value
Supply voltage	24 V DC ±10%
Typical power consumption	10 mA
Outputs	Short circuit-proof
Length x height x depth (+x: additional distance for cable)	104 x 70 x 33 mm
Min. installation distance (use spacer sleeves)	8 mm
Bolts	M3 x 18 mm
Temperature range: Storage & transport / operation	-20 – +70 °C / ±0 – +60 °C
Relative humidity: Storage & transport / operation (non-condensing)	+5 – +95 % / +15 – +85 %

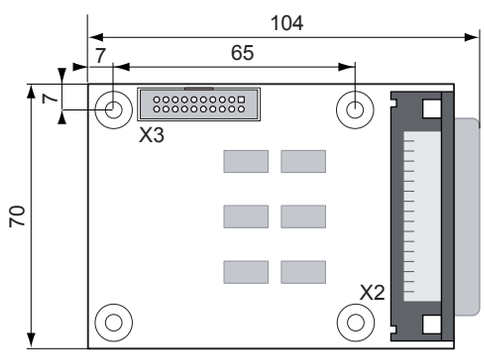

FPE circuit board marking

5.2 Terminal assignment and configuration

FPE X2	Colour code	Signals in single door mode	Signals in dual door mode	Technical data
1	wh	+24 V	+24 V	P
2	br	Car call 61	Car call 29 door side B	I/O; L; 250 mA / 24 V
3	gn	Car call 58	Car call 26 door side B	I/O; L; 250 mA / 24 V
4	ye	Car call 55	Car call 31 door side A	I/O; L; 250 mA / 24 V
5	gr	Car call 52	Car call 28 door side A	I/O; L; 250 mA / 24 V
6	pk	Car call 49	Car call 25 door side A	I/O; L; 250 mA / 24 V
7	bl	Car call 46	Car call 22 door side B	I/O; L; 250 mA / 24 V
8	rd	Car call 43	Car call 19 door side B	I/O; L; 250 mA / 24 V
9	bk	Car call 40	Car call 16 door side B	I/O; L; 250 mA / 24 V
10	pr	Car call 37	Car call 21 door side A	I/O; L; 250 mA / 24 V
11	gr pk	Car call 34	Car call 18 door side A	I/O; L; 250 mA / 24 V
12	rd bl	Car call 31	Car call 15 door side B	I/O; L; 250 mA / 24 V
13	wh gn	Car call 28	Car call 12 door side B	I/O; L; 250 mA / 24 V
14	br gn	Car call 25	Car call 09 door side B	I/O; L; 250 mA / 24 V

FPE X2	Colour code	Signals in single door mode	Signals in dual door mode	Technical data
15	wh ye	Car call 22	Car call 14 door side A	I/O; L; 250 mA / 24 V
16	ye br	Car call 19	Car call 11 door side A	I/O; L; 250 mA / 24 V
17	wh gr	Car call 16	Car call 08 door side A	I/O; L; 250 mA / 24 V
18	gr br	Car call 62	Car call 30 door side B	I/O; L; 250 mA / 24 V
19	wh pk	Car call 59	Car call 27 door side B	I/O; L; 250 mA / 24 V
20	pk br	Car call 56	Car call 24 door side B	I/O; L; 250 mA / 24 V
21	wh bl	Car call 53	Car call 29 door side A	I/O; L; 250 mA / 24 V
22	br bl	Car call 50	Car call 26 door side A	I/O; L; 250 mA / 24 V
23	wh rd	Car call 47	Car call 23 door side B	I/O; L; 250 mA / 24 V
24	br rd	Car call 44	Car call 20 door side B	I/O; L; 250 mA / 24 V
25	wh bk	Car call 41	Car call 17 door side B	I/O; L; 250 mA / 24 V
26	br bk	Car call 38	Car call 22 door side A	I/O; L; 250 mA / 24 V
27	gr gn	Car call 35	Car call 19 door side A	I/O; L; 250 mA / 24 V
28	ye gr	Car call 32	Car call 16 door side A	I/O; L; 250 mA / 24 V
29	pk gn	Car call 29	Car call 13 door side B	I/O; L; 250 mA / 24 V
30	ye pk	Car call 26	Car call 10 door side B	I/O; L; 250 mA / 24 V
31	gn bl	Car call 23	Car call 15 door side A	I/O; L; 250 mA / 24 V
32	ye bl	Car call 20	Car call 12 door side A	I/O; L; 250 mA / 24 V
33	gn rd	Car call 17	Car call 09 door side A	I/O; L; 250 mA / 24 V
34	ye rd	Car call 63	Car call 31 door side B	I/O; L; 250 mA / 24 V
35	gn bk	Car call 60	Car call 28 door side B	I/O; L; 250 mA / 24 V
36	ye bk	Car call 57	Car call 25 door side B	I/O; L; 250 mA / 24 V
37	gr bl	Car call 54	Car call 30 door side A	I/O; L; 250 mA / 24 V
38	pk bl	Car call 51	Car call 27 door side A	I/O; L; 250 mA / 24 V
39	gr rd	Car call 48	Car call 24 door side A	I/O; L; 250 mA / 24 V
40	pk rd	Car call 45	Car call 21 door side B	I/O; L; 250 mA / 24 V
41	gr bk	Car call 42	Car call 18 door side B	I/O; L; 250 mA / 24 V
42	pk bk	Car call 39	Car call 23 door side A	I/O; L; 250 mA / 24 V
43	bl bk	Car call 36	Car call 20 door side A	I/O; L; 250 mA / 24 V
44	rd bk	Car call 33	Car call 17 door side A	I/O; L; 250 mA / 24 V
45	wh br bk	Car call 30	Car call 14 door side B	I/O; L; 250 mA / 24 V
46	ye gn bk	Car call 27	Car call 11 door side B	I/O; L; 250 mA / 24 V
47	pk gr bk	Car call 24	Car call 08 door side B	I/O; L; 250 mA / 24 V
48	bk bl rd	Car call 21	Car call 13 door side A	I/O; L; 250 mA / 24 V
49	wh gn bk	Car call 18	Car call 10 door side A	I/O; L; 250 mA / 24 V
50	gn br bk	+24 V	+24 V	P

FPE: X3	Car call extension
1	+ 24 V
2	+ 24 V
3	+ 5 V
4	+ 5 V
5	Reset of SPI drivers
6	GND
7	Serial cycle
8	GND
9	Serial output
10	GND
11	Serial input
12	GND
13	SPI select 3 (car call 48..63)
14	GND
15	SPI select 2 (car call 32..47)
16	GND
17	SPI select 1 (car call 16..31)
18	GND
19	FPE detection
20	GND

6 FPA

The FPA car operating panel adapter provides tension spring terminals for all car operating panel signals of the FPM-1 X4 plug. It replaces the 50-pin round cable for the car operating panel wiring.

The FPA is connected to the X4 plug of the FPM-1 car operating panel module via the 50-pin X4 plug.

Switching from „single door mode“ to „dual door mode“ is done on the associated FPM-1 with the JK2 jumper. (see chapter *„3.2.2 Jumpers“ on page 8*)

6.1 Technical data

Description	Value
Supply voltage	24 V DC ±10%
Typical power consumption	60 mA
Outputs	Short circuit-proof
Length x height x depth (+x: additional distance for cable)	70 x 125 x 20 (+10) mm
Min. installation distance (use spacer sleeves)	8 mm
Bolts	M3 x 20 mm
Temperature range: Storage & transport / operation	-20 – +70 °C / ±0 – +60 °C
Relative humidity: Storage & transport / operation (non-condensing)	+5 – +95 % / +15 – +85 %

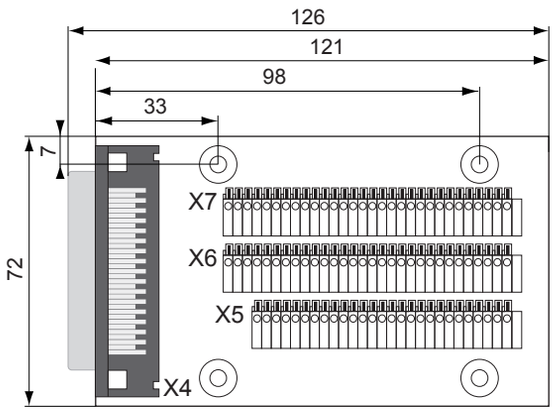

FPA circuit board marking

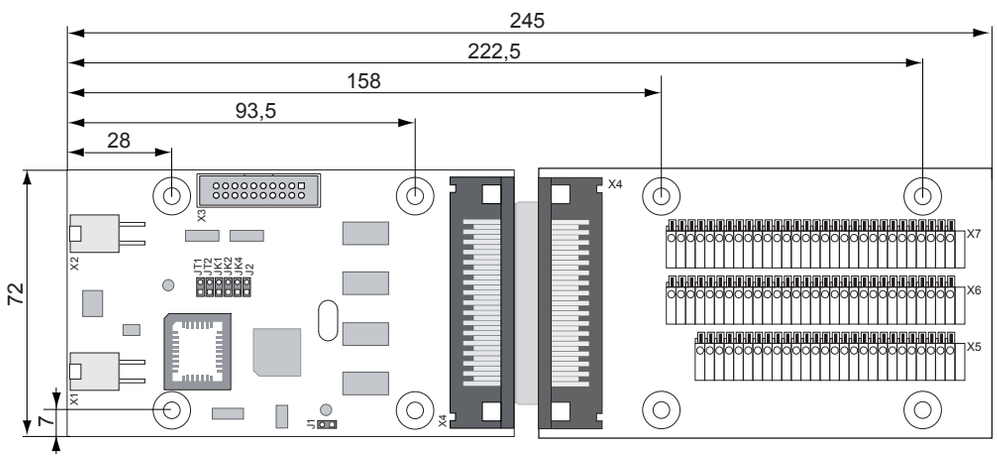

FPM-1 dimensions in combination with FPA

6.2 Terminal assignment and configuration

FPA X4 corresponds exactly to FPM-1 X4

FPA X5	Car operating panel signals	Technical data
1	Car call 00 (00 Door side A for dual door mode)	I/O
2	Car call 01 (01 Door side A for dual door mode)	I/O
3	Car call 02 (02 Door side A for dual door mode)	I/O
4	Car call 03 (03 Door side A for dual door mode)	I/O
5	Car call 04 (04 Door side A for dual door mode)	I/O
6	Car call 05 (05 Door side A for dual door mode)	I/O
7	Car call 06 (06 Door side A for dual door mode)	I/O
8	Car call 07 (07 Door side A for dual door mode)	I/O
9	Car call 08 (00 Door side B for dual door mode)	I/O
10	Car call 09 (01 Door side B for dual door mode)	I/O
11	Car call 10 (02 Door side B for dual door mode)	I/O
12	Car call 11 (03 Door side B for dual door mode)	I/O
13	Car call 12 (04 Door side B for dual door mode)	I/O
14	Car call 13 (05 Door side B for dual door mode)	I/O
15	Car call 14 (06 Door side B for dual door mode)	I/O

FPA X5	Car operating panel signals	Technical data
16	Car call 15 (07 Door side B for dual door mode)	I/O
17	Secondary car call release (e.g. active with card readers in car)	O
18	GND	P
19	Position indictor 0 (LSB)	O
20	Position indicator 1	O
21	Position indicator 2	O
22	Position indicator 3	O
23	Position indicator 4	O
24	Position indicator 5	O
25	Position indicator 6	O
26	Position indicator 7 (MSB)	O
27	+ 24 V	P

FPA X6	Car operating panel signals	Technical data
1	Car call release Call 00	O
2	Car call release Call 01	O
3	Car call release Call 02	O
4	Car call release Call 03	O
5	Car call release Call 04	O
6	Car call release Call 05	O
7	Car call release Call 06	O
8	Car call release Call 07	O
9	Car call release Call 08	O
10	Car call release Call 09	O
11	Car call release Call 10	O
12	Car call release Call 11	O
13	Car call release Call 12	O
14	Car call release Call 13	O
15	Car call release Call 14	O
16	Car call release Call 15	O
17	GND	P
18	GND	P
19	GND	P
20	GND	P
21	GND	P
22	GND	P
23	GND	P
24	GND	P
25	+ 24 V	P
26	+ 24 V	P
27	+ 24 V	P
28	+ 24 V	P
29	+ 24 V	P
30	+ 24 V	P

FPA X7	Car operating panel signals	Technical data
1	+ 24 V Call acknowledgement 00	O
2	+ 24 V Call acknowledgement 01	O
3	+ 24 V Call acknowledgement 02	O
4	+ 24 V Call acknowledgement 03	O
5	+ 24 V Call acknowledgement 04	O
6	+ 24 V Call acknowledgement 05	O
7	+ 24 V Call acknowledgement 06	O
8	+ 24 V Call acknowledgement 07	O
9	+ 24 V Call acknowledgement 08	O
10	+ 24 V Call acknowledgement 09	O
11	+ 24 V Call acknowledgement 10	O
12	+ 24 V Call acknowledgement 11	O
13	+ 24 V Call acknowledgement 12	O
14	+ 24 V Call acknowledgement 13	O
15	+ 24 V Call acknowledgement 14	O
16	+ 24 V Call acknowledgement 15	O
17	Door open button B or partition door button (see FST manual)	I
18	Door close button B	I
19	Door open button A	I
20	Door close button A	I
21	Landing control OFF or "loading control" button (see FST manual)	I
22	"Ventilator ON/OFF" button	I
23	Key switch fireman service	I
24	Key switch car priority	I
25	Direction UP	O
26	Direction DOWN	O
27	Overload display	O
28	Display 0 *	O
29	Display 1 *	O
30	Display 2 *	O

* see FST2XT-XTs manual „5.5.5 Display 0 ... 2“

NOTES

NOTES

NEW LIFT
NEUE ELEKTRONISCHE WEGE

NEW LIFT Neue Elektronische Wege
Steuerungsbau GmbH
Lochhamer Schlag 8
DE 82166 Gräfelfing

+49 (0) 89 898 66 0
+49 (0) 89 898 66 300
info@newlift.de
www.newlift.de

NEW LIFT
Service Center GmbH
Ruwerstraße 16
DE 54427 Kell am See

+49 (0) 6589 919 540
+49 (0) 6589 919 540 300
info@newlift-sc.de
www.newlift.de