NEW LIFT

NEUE ELEKTRONISCHE WEGE

# FST-2 FST-2XT

## Replacing FST-2 with FST-2XT

## *MANUAL*

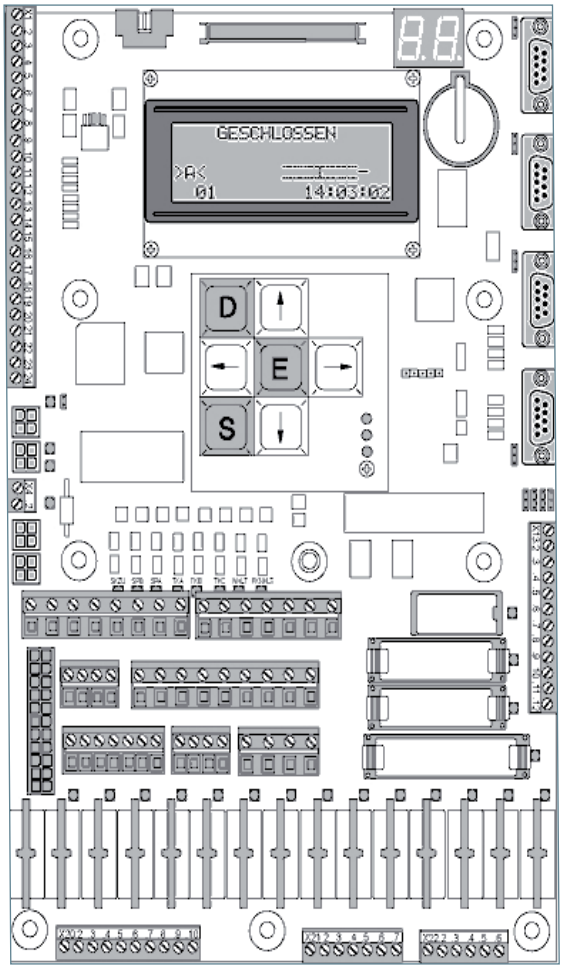


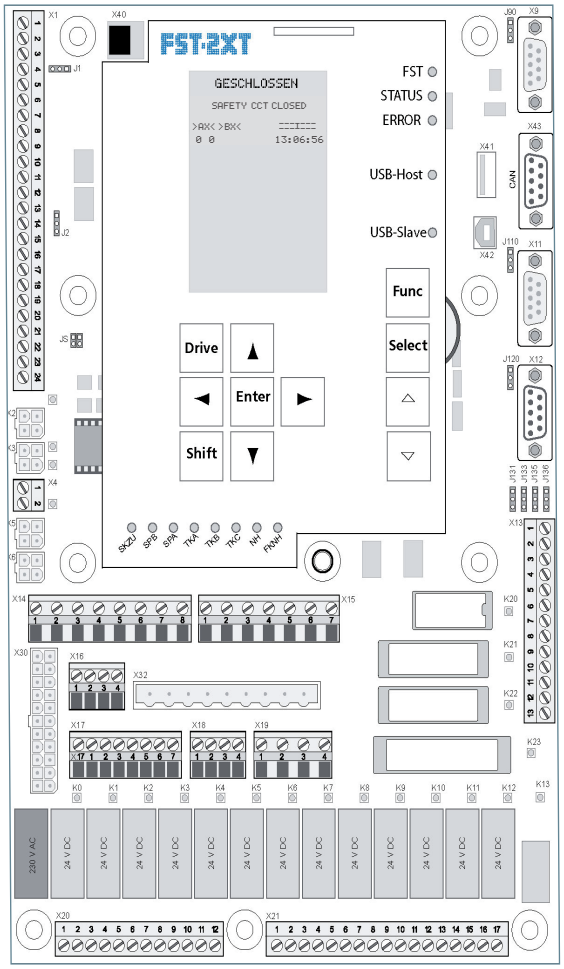

**Manufacturer**

NEW *LIFT* Steuerungsbau GmbH
Lochhamer Schlag 8
82166 Graefelfing

Tel +49 89 – 898 66 – 0
Fax +49 89 – 898 66 – 300
Mail info@newlift.de

www.newlift.de

**Service line**

Tel +49 89 – 898 66 – 110
E-mail service@newlift.de

**First edition** 17.12.2015

**Author** AL / EP

**Last change** 08.07.2019 AL / EP

**Release** 08.07.2019 AL

**Hardware version** up to FST-2 V2.1

**Software version** not relevant

**Doc. No.** hb_Austausch FST-2 gegen FST-2XT_2019-07_en

# Content

# 1 General

This manual is intended to simplify the replacement of the FST-2 circuit board with the FST-2XT circuit board. Read this manual carefully and observe the FST-2XT installation and commissioning manual as well as the included circuit diagrams and jumper settings for the circuit boards before beginning the replacement. After replacing, perform the tests listed under item 6 of certificates - “FST 5003.x - notices” on pages 1 and 2. Update the documents of the lift system on-site as well as other documents and those that may be present at the “designated entity”. A check of the parameters and functions transferred from the FST-2 circuit board or of the NEW *LIFT* factory parameter set is the responsibility of the person who performs the replacement. As assistance here, the test actuations as described in the FST-2XT mounting and commissioning manual under 6.7.4 are to be performed. The FST-2XT circuit board is generally compatible with the FST-2 circuit board. There are, however, additional functions resulting from further developments, relating to the EN81-1/2:1998 + A3:2009 A3 in particular, that are to be noted.

## 1.1 Abbreviations, characters and symbols used

***Safety-relevant information***

This symbol is located in front of safety-relevant information.

***Information notice***

This symbol is located in front of relevant information.

## 1.2 Further information

The following documents, among others, are available for the FST control system and its components:

› FST Installation & Commissioning
› FST manual
› ADM manual
› FPM manual
› SAM manual
› EAZ-256 manual
› EAZ-LCD and EAZ-VFD manual
› Fire recall manual

These and other current manuals can be found in the download area of our website under Service at http://www.newlift.de/en/service/download

## 1.3 How to contact us

If, after referring to this manual, you still require assistance, our service line is there for you:

Tel +49 89 – 898 66 – 110
Mail service@newlift.de

Mon. - Thurs.: 8:00 a.m. – 12:00 p.m. and 1:00 p.m. – 5:00 p.m.
Fr: 8:00 a.m. – 3:00 p.m.

## 1.4 General safety regulations

The FST-2XT must only be operated in perfect working condition in a proper manner, safely and in compliance with the instructions, the valid accident prevention regulations and the guidelines of the local power company.

The safety guidelines of the FST manual and the FST Installation and Commissioning manual always apply.

### 1.4.1 Applicable standards and guidelines

All FST-2XT circuit boards satisfy:

› the safety guidelines for the construction and installation of passenger and goods passenger lifts (DIN EN 81 Part 1 and 2).

› the conditions for the erection of high voltage installations with nominal voltages up to 1 kV (DIN VDE 0100).

› the contact protection measures in the machine room (VDE 0106).

› the data sheet on safety measures for the installation, maintenance and commissioning of lift systems (ZH 1/312).

### 1.4.2 Electromagnetic compatibility (EMC)

An accredited inspection authority has inspected the FST control system and its components in accordance with the standards, thresholds and severity levels named in EN 12015/1995 and EN 12016/1995.

The FST control system and its components are:

› immune to electrostatic discharge (EN 61000-4-2/1995)

› immune to electrostatic fields (EN 61000-4-3/1997)

› immune to fast transient disturbances (EN 61000-4-4/1995)

The electromagnetic disturbance field strengths created by the FST control system and its components do not exceed the permissible thresholds. (EN 55011/1997).

### 1.4.3 Handling electronic assemblies

Electrostatic charge

› Keep the electronic assembly in its original packaging until installation.

› Before opening the original packaging, a static discharge must be performed. To do this, touch a grounded piece of metal.

› During work on electronic assemblies, periodically perform this discharge procedure

› All bus inputs and outputs not in use must be equipped with a terminal resistor (terminator).

# 2 Data transmission via LON Bus

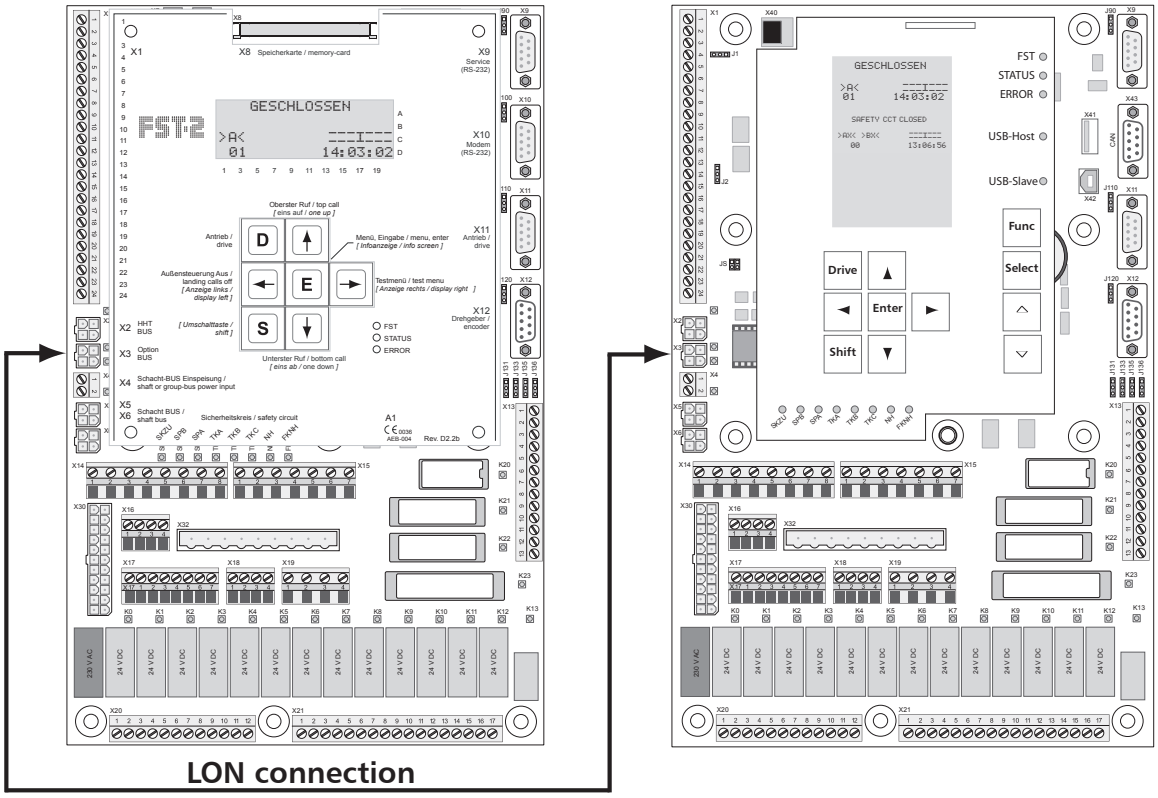


With group lifts, the following step is also to be observed:

› With lift groups, switch the other group members off completely via the respective main switches (Q1) and controller fuse (F4). For the circuit board that is to be replaced, leave the control system on so that the FST-2 circuit board is electrically live and ready for use (FST-LED illuminates and the display is in operation).

Transferring parameters with single lifts:

› The control system is switched on and the FST-2 circuit board is electrically live and ready for use.

› Now switch on auxiliary mode and make certain that all doors are closed.

› Disconnect the plugs for the shaft bus (X5 and X6).

› Set the lift ID-number parameter on the FST-A (`MAIN MENU/Config/ID's/Lift ID-Number`).

› Before opening the original packaging of the FST-2XT, a static discharge must be performed. To do this, touch a grounded piece of metal.

› Set down the FST-2XT circuit board in an insulated manner so that it is not touching any conductive parts, e.g., on the original packaging.

› Connect the installed FST-2 to the new FST-2XT with a bus cable at the respective X3 bus connectors (options bus).

› Wait until the FST-2XT has started up.

› Activate the hidden menus (`MAIN MENU/System/Factory Menu/Hidden Menus/Yes`).

› Start the transfer of parameters with the `Clone FST-2 LON` command with Enter.

› In the FST-2 display, data transfer is indicated by the brief appearance of "`FTX`" before the date.

› Transfer is concluded when `Config. transfer ok` appears in the display with the FST-2XT.

› The FST-2XT automatically restarts with the accepted parameters.

› Please wait until the FST-2XT has started up again completely.

› Now switch off the control system completely via the main switch (Q1) and the controller fuse (F4).

› Remove the FST-2 circuit board while in a de-energised state and install the new FST-2XT circuit board and restore the corresponding connections.

› Switch the main switch (Q1) and the fuse (F4) back on again.

› Wait until the FST-2XT has started up again completely and make certain that the correct lift ID-number is set for the FST-2XT (`MAIN MENU/Config/ID's/Lift ID-Number`).

› This concludes the transfer of parameters.

# 3 Data transmission via serial interface

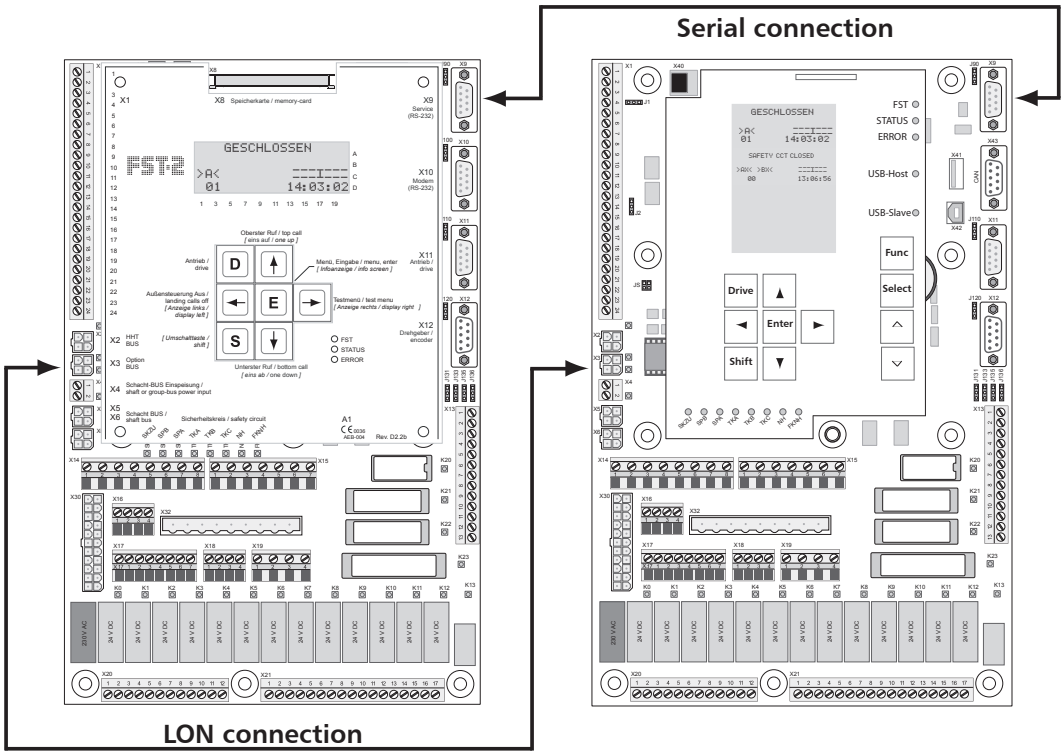


With group lifts, the following step is also to be observed:

› With lift groups, switch the other group members off completely via the respective main switches (Q1) and controller fuse (F4). For the circuit board that is to be replaced, leave the control system on so that the FST-2 circuit board is electrically live and ready for use (FST-LED illuminates and the display is in operation).

Transferring parameters with single lifts:

› The control system is switched on and the FST-2 circuit board is electrically live and ready for use.

› Now switch on auxiliary mode and make certain that all doors are closed.

› Disconnect the plugs for the shaft bus (X5 and X6).

› Set the lift ID-number parameter on the FST-A (`MAIN MENU/Config/ID's/Lift ID-Number`).

› Before opening the original packaging of the FST-2XT, a static discharge must be performed. To do this, touch a grounded piece of metal.

› Set down the FST-2XT circuit board in an insulated manner so that it is not touching any conductive parts, e.g., on the original packaging.

› Connect the installed FST-2 to the new FST-2XT with a bus cable at the respective X3 bus connectors (options bus).

› In addition, also connect the installed FST-2 to the new FST-2XT with a serial cable (null modem cable, *NOT a standard serial cable!*) at the respective X9 plug.

› Wait until the FST-2XT has started up.

› Activate the hidden menus (`MAIN MENU/System/Factory Menu/Hidden Menus/Yes`).

› Start the transfer of parameters with the `Clone FST-2 SERIAL` command with Enter.

› Transfer is concluded when `Config. transfer ok` appears in the display with the FST-2XT.

› The FST-2XT automatically restarts with the accepted parameters.

› Please wait until the FST-2XT has started up again completely.

› Now switch off the control system completely via the main switch (Q1) and the controller fuse (F4).

› Remove the FST-2 circuit board while in a de-energised state and install the new FST-2XT circuit board and restore the corresponding connections.

› Switch the main switch (Q1) and the fuse (F4) back on again.

› Wait until the FST-2XT has started up again completely and make certain that the correct lift ID-number is set for the FST-2XT (`MAIN MENU/Config/ID's/Lift ID-Number`).

› This concludes the transfer of parameters.

# 4 Circuit diagram, monitoring control voltage

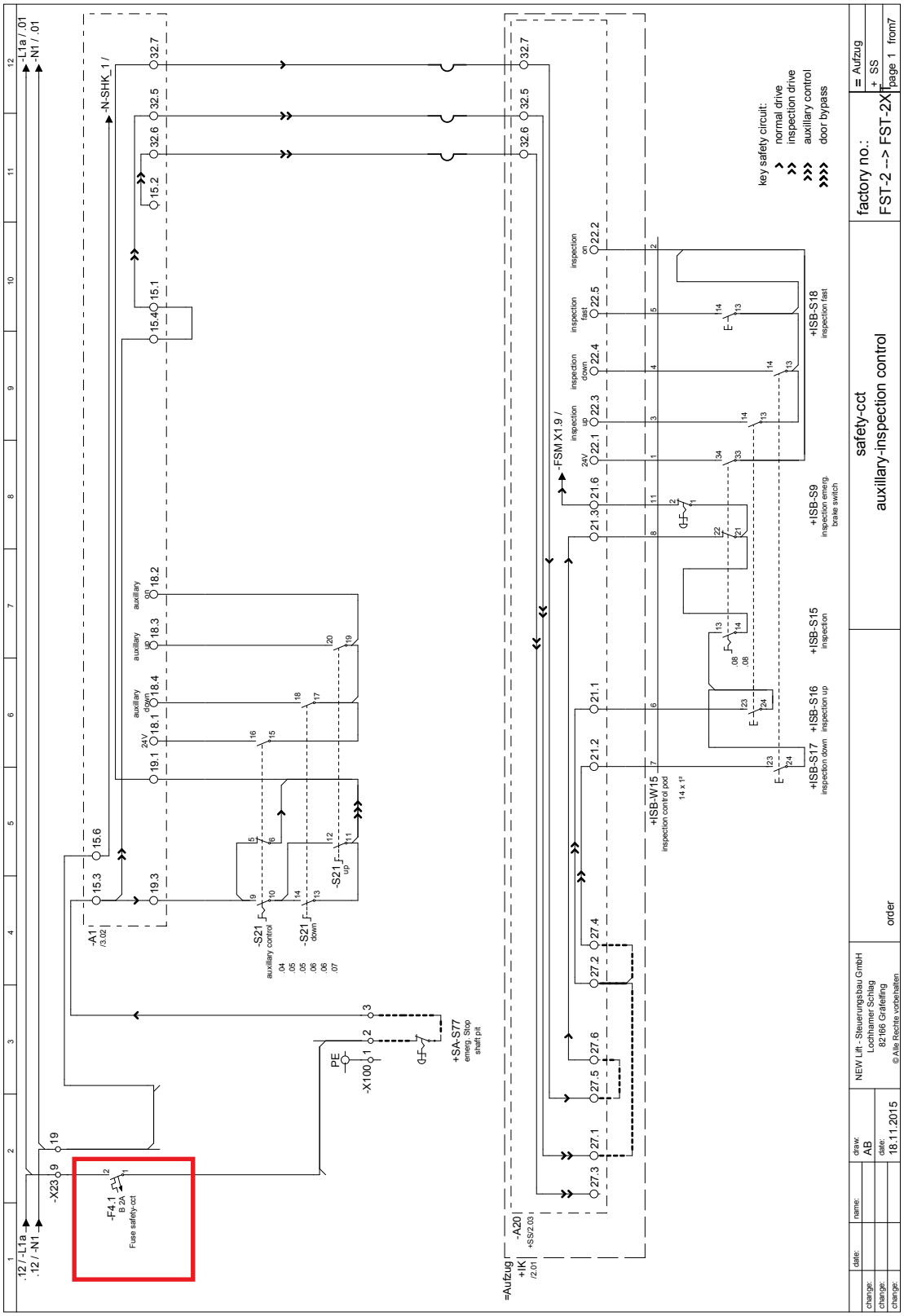

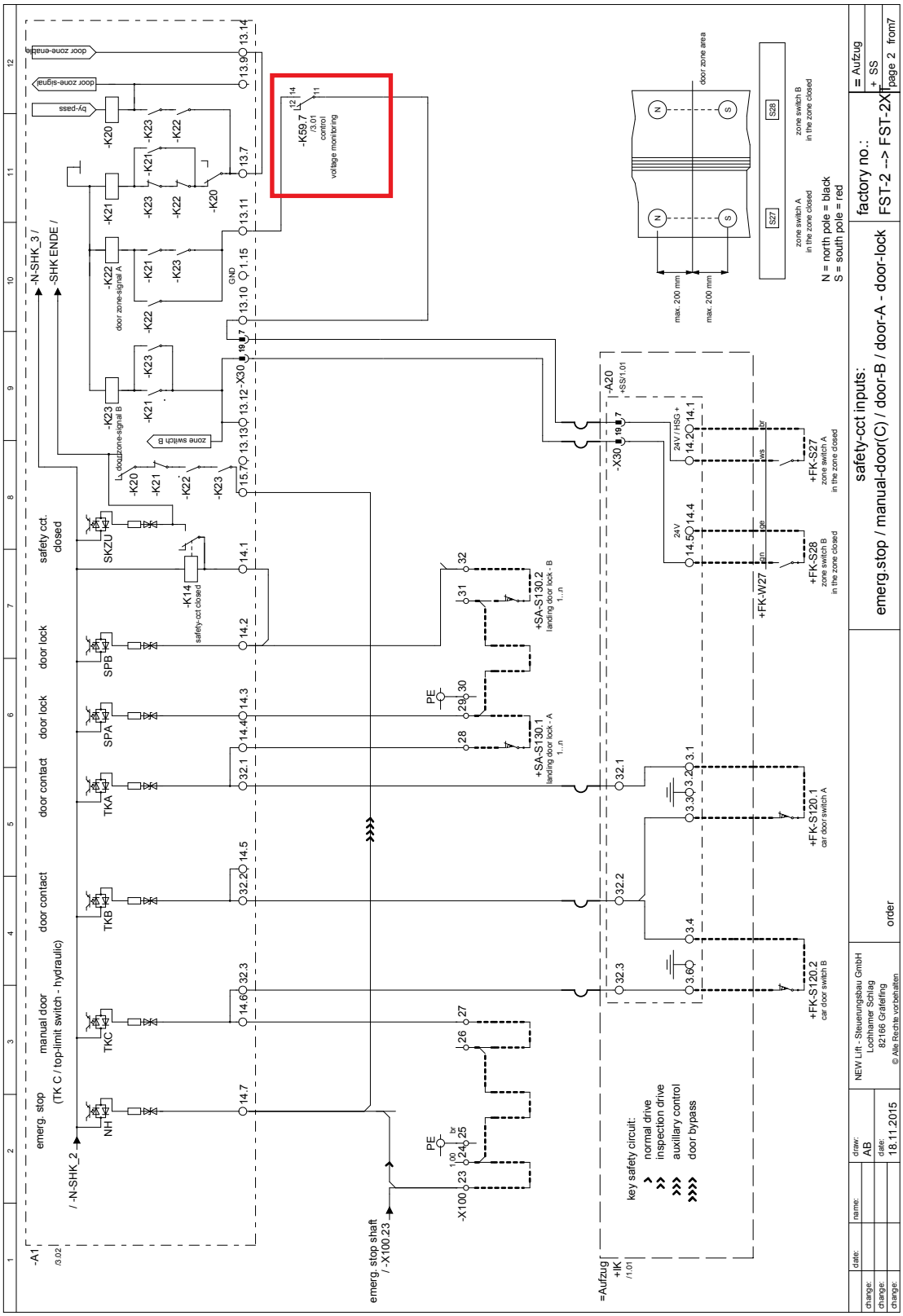
safety-cct inputs:
emerg.stop / manual-door(C) / door-B / door-A - door-lock
factory no.:
FST-2 --> FST-2XT
= Aufzug
+ SS
page 2 from7
order
NEW Lift - Steuerungsbau GmbH
Lochhamer Schlag
82166 Gräfelfing
© Alle Rechte vorbehalten
draw: AB
date: 18.11.2015
key safety circuit:
normal drive
inspection drive
auxillary control
door bypass
emerg. stop
manual door
(TK C / top-limit switch - hydraulic)
door contact
door contact
door lock
door lock
safety cct.
closed
door zone area
max. 200 mm
max. 200 mm
N = north pole = black
S = south pole = red
zone switch A
in the zone closed
zone switch B
in the zone closed
emerg. stop shaft
/ -X100.23
-K59.7
/3.01
control
voltage monitoring
door zone-signal
door zone-enable
by-pass
zone switch B
-N-SHK_3 /
-SHK ENDE /
/ -N-SHK_2
-A1
/3.02
=Aufzug
+IK
/1.01
-A20
+SS/1.01
+SA-S130.1
landing door lock - A
+SA-S130.2
landing door lock - B
+FK-S27
+FK-S28
+FK-W27
+FK-S120.1
car door switch A
+FK-S120.2
car door switch B
-X100
-X30
-X12
-K14
safety-cct closed
SKZU
SPB
SPA
TKA
TKB
TKC
NH
PE
24V / HSG +
24V
GND

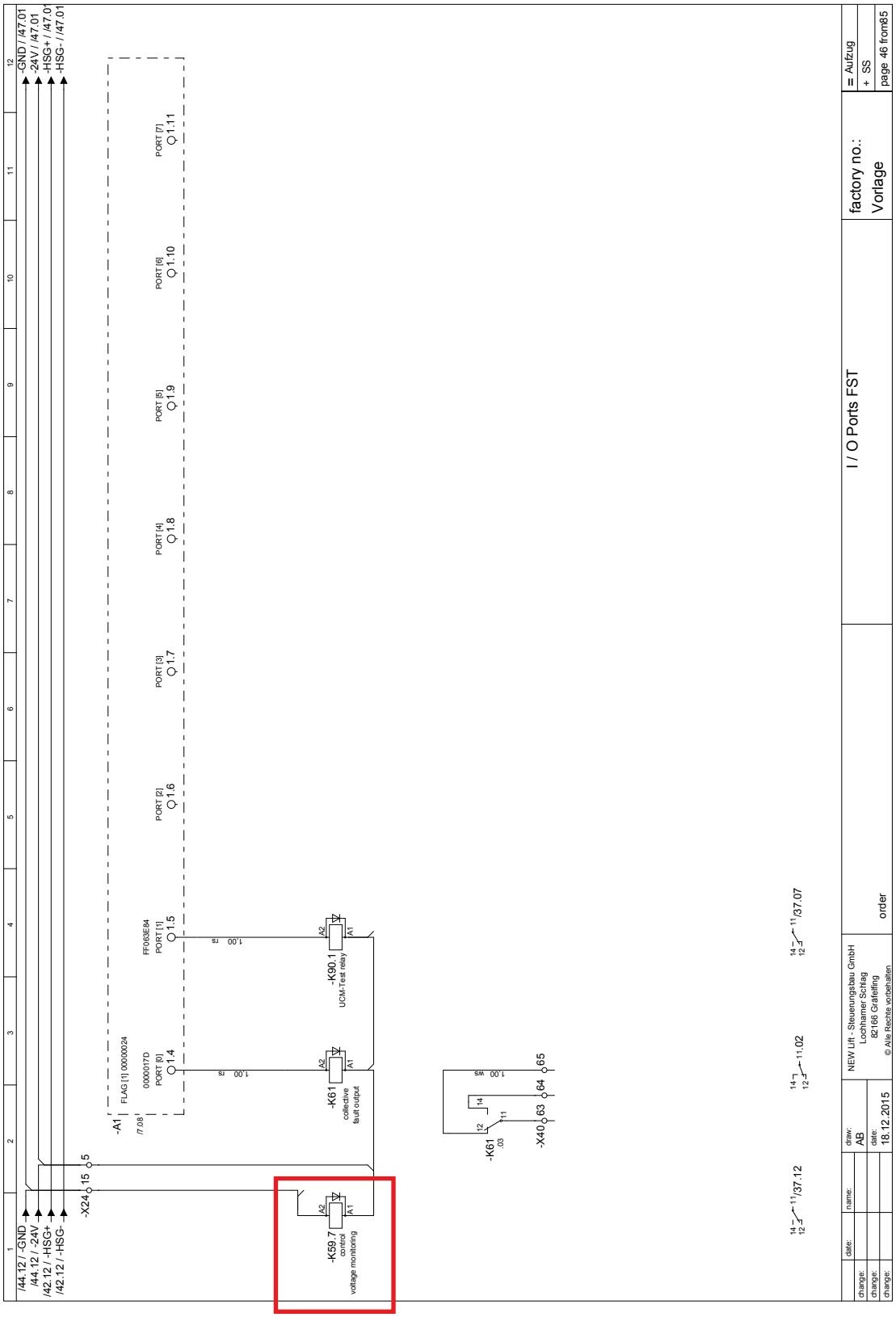
-GND / /47.01
-24V / /47.01
-HSG+ / /47.01
-HSG- / /47.01
/44.12 / -GND
/44.12 / -24V
/42.12 / -HSG+
/42.12 / -HSG-
-X24
-A1
FLAG (1) 00000024
/7.08
0000017D
PORT [0]
1.4
FF063E84
PORT [1]
1.5
PORT [2]
1.6
PORT [3]
1.7
PORT [4]
1.8
PORT [5]
1.9
PORT [6]
1.10
PORT [7]
1.11
-K90.1
UCM-Test relay
-K61
collective fault output
-K59.7
control voltage monitoring
-K61
.03
-X40
/37.12
/11.02
/37.07
I / O Ports FST
factory no.:
Vorlage
order
= Aufzug
+ SS
page 46 from85
NEW Lift - Steuerungsbau GmbH
Lochhamer Schlag
82166 Gräfelfing
© Alle Rechte vorbehalten
draw:
AB
date:
18.12.2015
name:
date:
change:

# 5 Setting instructions

**Important note for commissioning, exchange of circuit board or software update of FST-2 / XT / S controllers with regard to UCM-A3 errors**

Due to the EN81-1/2:1998 + A3:2009 A3, which has been mandatory since 01 January 2012, the FST-2 product family is equipped standard with the “UCM-A3” software function. For reasons of safety, this function is activated with this delivered circuit board / control system or software update! If the UCM-A3 function is not needed, deactivation can be performed as follows.

`Main Menu/System/Factory Menu/`

`Hidden Menus/YES/Settings/Miscel 11/xxxxx1xxx`

**Change exclusively the only 4th position right on the value „1“ !**

- Save the change with **„**`Save changes values`**“** YES

- The test functions remain visible in the test menu even after deactivation, but internal comparison and query cycles are deactivated.

- In addition, error message **„**`DRM UCM-A3 Error`**“** may appear. A reset can only be performed under test menu **“**`UCM-A3 Error Reset`**“.**

From version V0091 a drive with the auxiliary or inspection control for upcoming signals **„**`DRM UCM-A3 Error`**“** or **„**`DRM A3-Drive Error`**“** is no longer possible.

It is assumed the fault is removed, the reset is only unter `Testmenu` **“**`UCM-A3 Fault Reset`**“** possible.

If UCM- A3 lock-out is not required with the auxiliary or inspection control, deactivation can take place as follows:

`Main Menu/System/Factory Menu/`

`Hidden Menus/YES/Settings/Miscel 13/xxxxx1xxx`

**Change exclusively the only 4th position right on the value „1“ !**

This function depends on facilities. Furthermore, NEW *LIFT* cannot influence the installation place of this circuit board or software. For this reason it is the responsibility of recipient / lift service technician. NEW ***LIFT*** takes over no responsibility for any damage caused by improper deactivation of above-mentioned function UCM-A3!

# 6 Certificates

**FST 5 00 3.x – Information**

1. **The scan control on the safety circuit**
The power supply neutral conductor is connected to the terminal A1:X15.6 (input) and to all optocouplers of the scan control on the safety circuit. The neutral conductor on terminal A1: X20.2 (output) is led out through the conductor path again. All drive and brake contactors as well as hydraulic valve coils must be provided with the neutral conductor from the terminal A1:X20.2. The end of the safety circuit is at X20.1. The conductor paths of the safety-relevant circuits on the printed circuit board have a distance from each other of at least 4 mm. According to IEC 664-1 this corresponds to pollution degree 3.

Test instruction:
- start the lift system, release the terminal A1:X15.6 and pull out the neutral conductor. **CAUTION! Use insulated screwdrivers, because this terminal is under pressure now.**
- All valves, drive and brake contactors must dropped out immediately.
- Switch the lift system in an unpowered state. – Reconnect the neutral conductor to A1:X15.6.

2. **Inspection controller**
The uncontrolled door movements are prevented, the car speed is max. 0,63m/s and the operational terminal landings are not overtraveled.

3. **Auxiliary control,** here the car speed is max. 0,63m/s.

4. **The safety circuit bypass control** (when provided)
- The safety circuit bypass control is performed with and without relay sockets.
- If two identically constructed zone switches are used, they must comply with the requirements of EN81 part 1 and part 2 chapter F6.3.1.1 (vibration test).
- Malfunction is detected by the controller and results in a system shutdown.
- A detailed funktional and test description is on the 2nd page of this document.
- The installation and operating instructions of the control must be observed.

5. **Runtime monitoring.** All control types are equipped with a standard runtime monitoring.

Test instruction:
- After driving has begun, the drive unit must be shut down.
The standstill of a hydraulically driven lift can be caused e.g by the disconnection the UP or DOWN valve. The standstill of a lift with a traction drive can be caused by the disconnection the inverter enable or similar. Description of the procedure can be found in the operating manual of the drive.
- In case of forced standstill of the drive and a driving command the controller is brought to a standstill after the set time on the controller menu.
- Remove the simulated failure again. – By switching ON/OFF the controller, the lift will become operational again.

6. **Version level**
The version level of the printed circuit board is fixed in the two last positions of the module name. All printed circuit boards of version 3.x remain unchanged in the range of safety circuit bypass control and the scan control on the safety circuit, exept technical improvements. The "x" represents the minor version numbers 0...9.

**FSM 5 20 2.x,3.x – Information**

**The safety circuit on the printed circuit board**
Switching elements of the safety circuit on the car roof are directly connected to the so-called car top control module (abbreviation FSM). The two assemblies FST 5 00 3.x and FSM 5 20 2.x, 3.x are linked via travelling cable, are interdependent and form a unit. On the car top control module the safety circuit with conductor paths is led between terminals and the traveling cable plug. These conductor paths of the safety-relevant circuits on the printed circuit board have a distance from each other of at least 4 mm. According to IEC 664-1 this corresponds to pollution degree 3. Use a fuse of max. 4A for the safety circuit, because these conductor paths are designed for nominal current of 4A.

**Funktion and inspection description of the safety circuit bypass control to door bypass in the zone.**

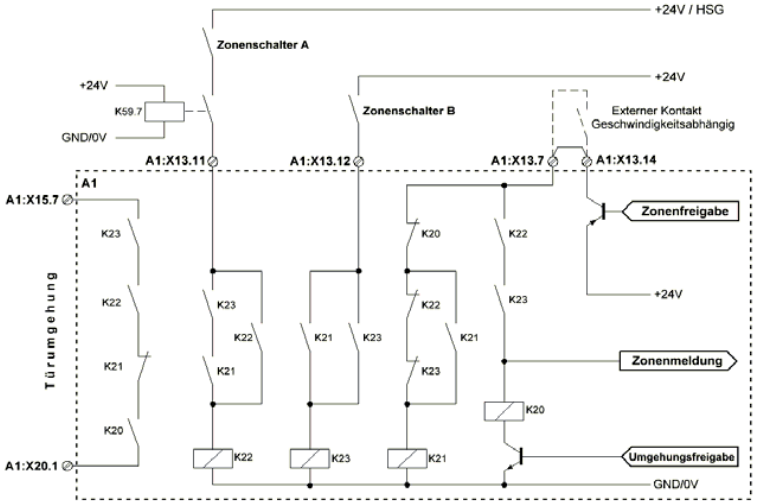


1. A zone release (+24V) must be activated by the controller. A zone release is activated only if necessary, i. e. if the controller opens the car door in the corresponding holding position.
2. First K21 must be energized, for this purpose K20, K22 and K23 must be released. K21 holds itself as long as K20 is not energized and there is a zone release.
3. K23 can be energized after K21 by closing zone switch B. K23 holds itself as long as zone switch B is closed.
4. K22 can be energized after K23 and K21, by closing zone switch A. K22 holds itself as long as zone switch A is closed.
5. K23 and K22 are energized, K20 can also be energized, as soon as the controller starts bypass release (0V). However, this happens only as needed and when the car speed is <0.3 m / s. – If K20 is energized, K21 drops out. The door bypass is active now, until the bypass release is revoked and K20 drops out again.
6. K22 and K23 drop out, when switches A and B are open again caused by drive out of the door zone. Only when both relays are dropped out, another cycle can begin. K21 is energized, as soon as the controller switches a renewed zone release.

Self monitoring of the safety circuit bypass control
After each drive the active bypass during levelling and opening of the car door is read back by an optocoupler at the end of the safety circuit the scan control. If signal bypass fails, there is a malfunction/error and the controller is brought to a standstill. After each drive canceling of bypass is also tested, e.g. during levelling, standstill and opening car door bypass release is removed and K20 drops out. This process is detected by the optocoupler.
If the optocoupler doesn't detect this modification, it is also brought to a standstill.

Test instruction:
- Simulate an open zone switch A, for this purpose disconnect terminal A1:X13.11.
- The controller detect this malfunction while the car is at rest, no further drive is possible.
- Furthermore, a return device to the lowest stop position, after the door has been closed, is activated (for hydraulic systems). Only the command output, to reopen the car door, is still held active there.
- As soon as the simulated failure has been corrected, lift system can be put into operation again by switching ON/OFF the controller.

Operating conditions:
The integrated safety circuit bypass control on the printed circuit board is a fixed component of the FST 5 00 3.x controller. It is designed for a 0…+65°C temperature range at a relative humidity 15…85%.
The operating voltage is 24VDC, operating contacts and conductor paths of the safety circuit are designed for 230VAC max. 4A. A closing contact from X20.1 to X14.1 is integrated into the controller for quick-start. Make sure there is no direct connections from X14.1 to X15.7. The conductor paths of the safety-relevant circuits on the printed circuit board have a distance from each other of at least 4 mm. According to IEC 664-1 this corresponds to pollution degree 3. Protection against explosion, water or contact is not provided (IP00).

ZERTIFIKAT ◆ CERTIFICATE ◆ 認証証書 ◆ СЕРТИФИКАТ ◆ CERTIFICADO ◆ CERTIFICAT

Industrie Service

# EU-TYPE EXAMINATION CERTIFICATE

**According to Annex IV, Part A of Directive 2014/33/EU**

| | |
|---|---|
| **Certificate No.:** | EU-ESD 023 |
| **Certification Body of the Notified Body:** | TÜV SÜD Industrie Service GmbH<br>Westendstr. 199<br>80686 München - Germany<br>Identification number 0036 |
| **Certificate holder:** | NEW *LIFT* GmbH<br>Lochhamer Schlag 8<br>82166 Gräfelfing - Germany |
| **Manufacturer of the Test Sample:** | NEW *LIFT* GmbH<br>Lochhamer Schlag 8<br>82166 Gräfelfing - Germany |
| **Product:** | Printed circuit boards "FST-2XT" and "FSM-2" with electronic components, taps in the safety circuit and safety circuit bypass control as well as subsystem against unintended car movement |
| **Type:** | FST 5 00 (FST-2XT) and FSM 5 20 (FSM-2) |
| **Directive:** | 2014/33/EU |
| **Test basis:** | - Directive 2014/33/EU dated 2014-02-26 Annex I<br>- EN 81-1/2:1998+A3:2009 (D)<br>- EN 81-20:2014 (D)<br>- EN 81-50:2014 (D) |
| **Test report:** | EU-ESD 023 dated 2016-10-04 |
| **Outcome:** | The safety component conforms to the essential health and safety requirements of the mentioned Directive as long as the requirements of the annex of this certificate are kept. |
| **Date of issue:** | 2016-10-04 |
| **Date of translation:** | 2017-03-28 |

TÜV SÜD Industrie Service GmbH 00 36 Notified Body

Achim Janocha
Certification Body "lifts and cranes"

TÜV®

## Enclosure to the EU-Type Examination Certificate
## No. EU-ESD 023 of 2016-10-04

TÜV SÜD
Industrie Service

**Authorised Manufacturer of Serial Production – Production Sites (valid from: 2016-10-04):**

**Company:** NEW *LIFT* GmbH

**Address:** Lochhammer Schlag 8
D-82166 Gräfelfing
Germany

- END OF DOCUMENT -

Based on: Document from NEW LIFT of 2016-08-30

Page 1 of 1

## Annex to the EU Type Examination Certificate
## No. EU-ESD 023 of 2016-10-04

Industrie Service

### 1 Scope of application

The test items are the FST 5 00 (FST-2XT) printed circuit board as "lift control system" and FSM 5 20 (FSM-2) printed circuit board as "car top control module" with electronic components, taps in the safety circuit and safety circuit bypass control (FST 5 00) as well as subsystem as element for detecting unintended car movement. Also tested are the clearance and creepage distances of the FST 5 00 and the FSM 5 20 as well as the safety circuit scan control of the FST 5 00.

1.1 Function of the safety circuit

The safety circuit bypass control consists of the K21, K22 and K23 safety relays.
The SHS_ZOFR (+24V) zone release signal must be activated by the controller. A zone release is active if necessary, i.e., if the controller is to open the car door on the corresponding floor.
First, K21 must be energized; for this purpose, K20, K22 and K23 must be de-energized. K21 holds itself as long as K20 is not energized and there is a zone release.
K23 can only be energized after K21 if zone switch B closes. K23 holds itself as long as zone switch B is closed.
K22 can be energized after K23 and K21 if zone switch A closes. K22 holds itself as long as zone switch A is closed.
If K23 and K22 are energized, K20 can also be energized as soon as the controller starts the bypass release (0V). This, however, only occurs as needed and if the car speed is <0.3m/s. Not until K20 energizes does K21 de-energize. The door bypass is now active and remains so until the bypass release is cancelled and K20 is de-energized again.
K22 and K23 are not de-energized until switches A and B are opened again due to a drive outside of the door zone. – Only if both relays are de-energized can another cycle begin by energizing K21 as soon as the controller switches a renewed zone release. Transistor T2 is used for resetting relay K22 after a power failure.
In the event of failure of the operating voltage, zone switch A continues to be supplied via auxiliary power supply HSG, allowing the door zone to be detected should freeing be necessary. At the same time, T2 switches K22 and K23 off so that when the operating voltage is restored, the switching sequences can be completed as described.

## Annex to the EU Type Examination Certificate
## No. EU-ESD 023 of 2016-10-04

TÜV SÜD
Industrie Service

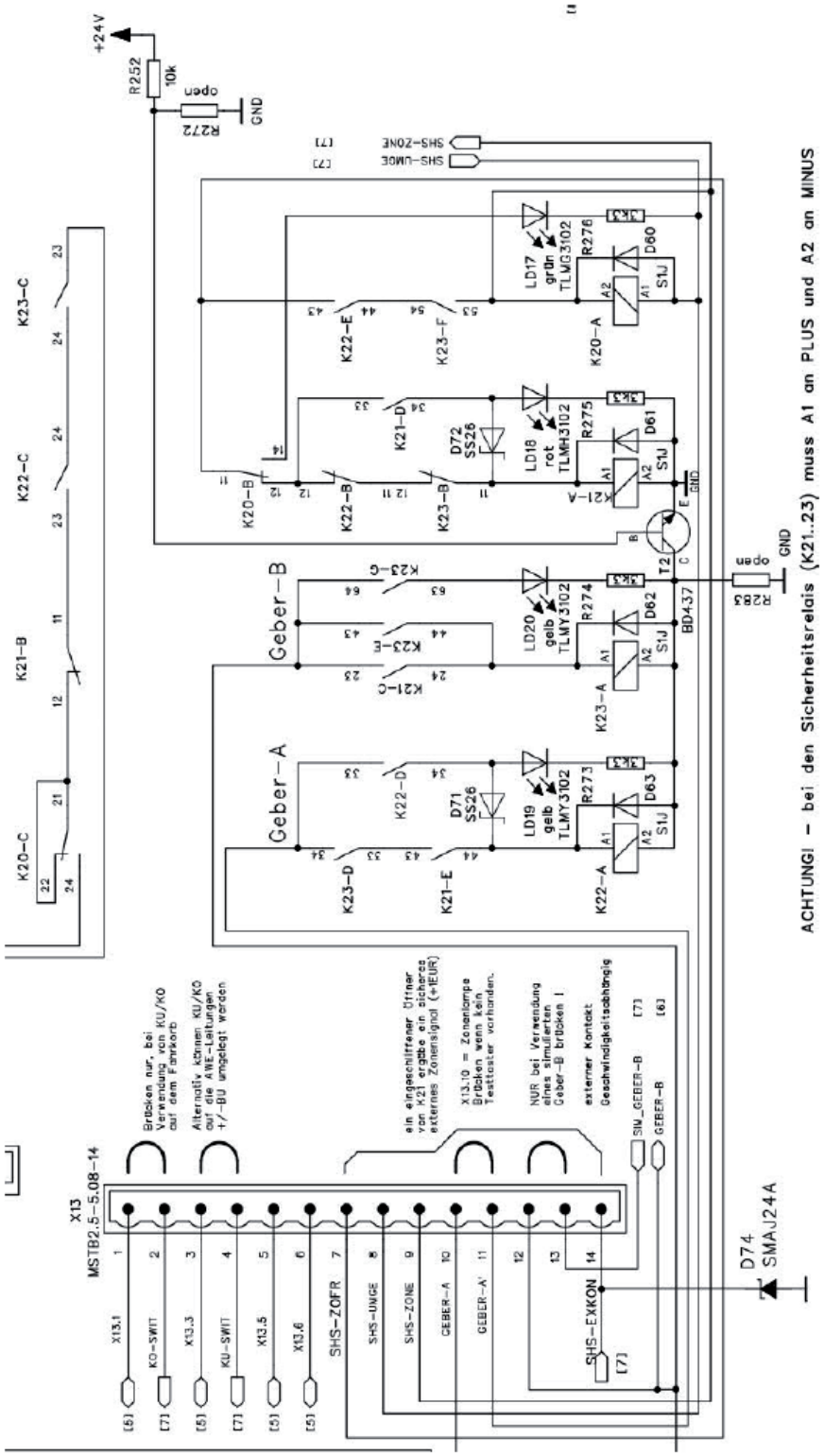


Figure 1: Portion of the wiring diagram for the control system of the door zone bypass

## Annex to the EU Type Examination Certificate
## No. EU-ESD 023 of 2016-10-04

Industrie Service

Depicted on the following page is the wiring diagram of the safety circuit scan control and safety circuit bypass control (figure 2).

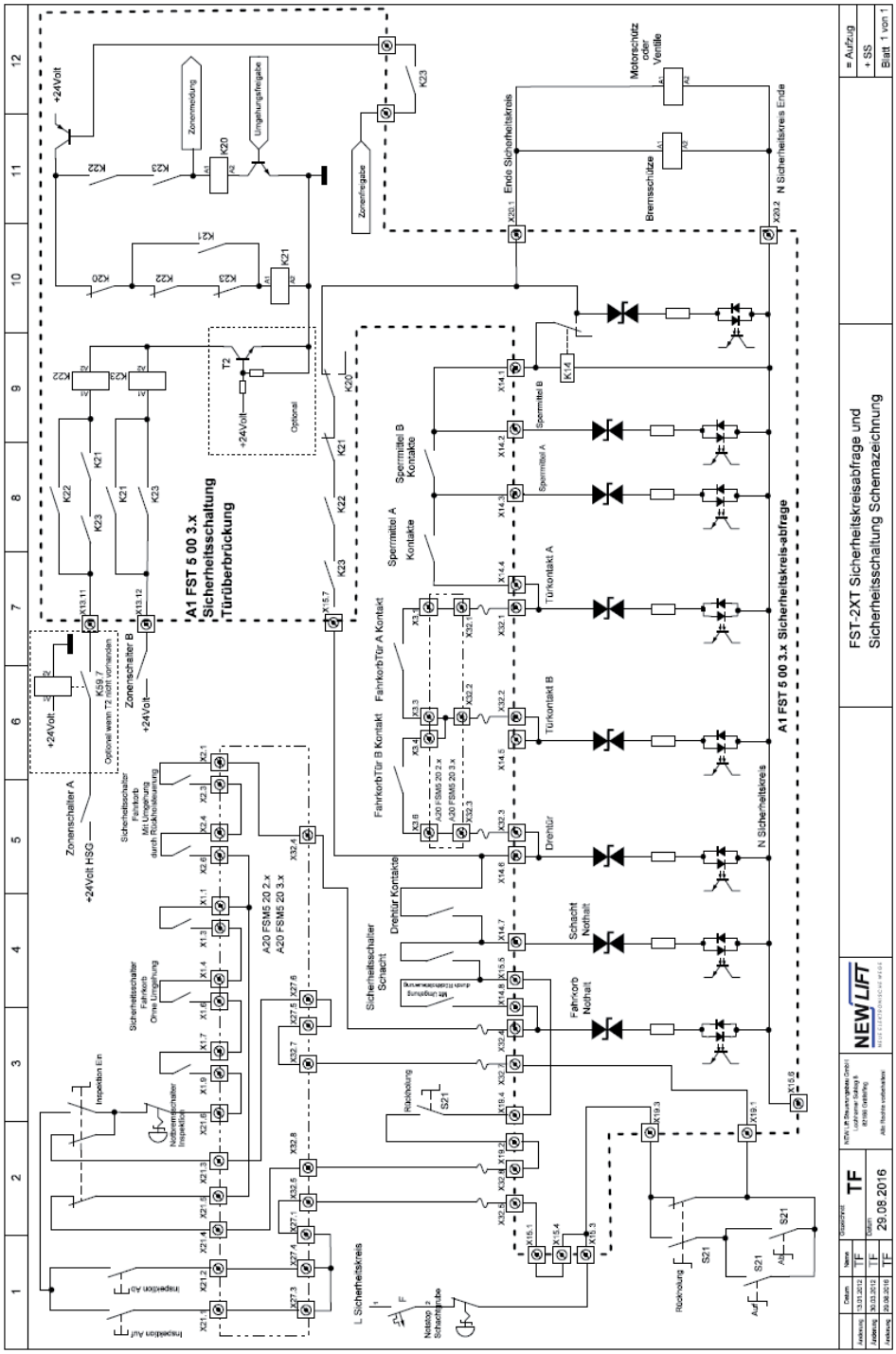


Figure 2: Wiring diagram of the safety circuit scan control and safety circuit bypass control Type FST-2XT

.

**Annex to the EU Type Examination Certificate**
**No. EU-ESD 023 of 2016-10-04**

Industrie Service

1.2 Description of the function against unintended car movement

For the device as a detecting and, if necessary, triggering element: if combined with a braking element tested in accordance with A3, e.g., in the form

a) of a drive brake for electrically operated rope lifts,

b) of a safety valve or similar for hydraulically driven lifts, this can represent the detecting as well as the triggering element of the entire protective device against the unintended movement of the car. If, on the other hand, the device is combined with a braking element tested in accordance with A3, e.g., in the form

c) of a double-acting safety gear/braking device triggered by a speed limiter tested in accordance with A3 as a triggering element – for both electrically operated rope lifts as well as with hydraulically driven lifts – this can only represent the detecting element of the entire protective device against the unintended movement of the car.

1.2.1 Electrically operated passenger and freight lifts

The safety circuit bypass control is only activated by the control system if firstly the target floor has been reached and secondly the measured car speed is ≤ 0.2 m/s.

The safety circuit bypass control, when triggered, i.e.,

– if the door zone (defined by two magnet switches) is exited as well as

– before the door zone is exited with a speed of ≥ 0.2 m/s with unlocked landing door and/or open car door,

ensures a safe shutdown of the downstream drive components and, subsequently,

– either the triggering of the braking element according to cases (a.) and (b.) in the comment of the previous section

– or the activation of the triggering element of the protective device against the unintended car movement in cases of the combination specified in (c). of the previous section.

The car speed is detected by the control system via the encoder of the shaft positioning system. For additional safety (redundancy), a speed-dependent contact of the frequency inverter is integrated at the terminals of the control system – A1:X13.7 and A1:X13.14. It is thereby ensured that the safety circuit bypass control is also inactive (safety circuit open) if the frequency inverter detects a car speed of more than 0.2 m/s.

1.2.2 Hydraulically operated passenger and freight lifts

In principle, the function is identical to that of electrically operated passenger and freight lifts (electrically operated rope lifts), but without monitoring of the car speed.

## Annex to the EU Type Examination Certificate
## No. EU-ESD 023 of 2016-10-04

Industrie Service

1.2.3 Electrically as well as hydraulically operated passenger and freight lifts

In order to adhere to the permissible total stopping distance in the case of an unintended car movement, the length of the door zone must be limited depending on the installation and its maximum length calculated during the course of planning the lift system.

For the device in question, the reaction times of the detecting element (sensors and their control system) as well as the reaction times and reaction distances of the triggering element and those of the braking element(s) in addition to the maximum possible acceleration by the drive in the event of an error (if applicable) and the mass ratios and other factors that influence the movement of the lift system (compensation tools, rope lengths depending on the type of rope arrangement and drive arrangement,...) are known for this purpose.

The calculated, maximum door zone size must be entered in the menu of the control system during commissioning. During the automatic learn drive, the actually specified door zone lengths are automatically checked for correctness at all floors by the control system.

During tests of the lift system in the course of the conformity assessment procedure, tests "UCM-A3 test upward" and "UCM-A3 test downward" are to be performed in the test menu of the FST controller.

This ensures that the UCM case is performed with the assistance of the UCM test relay under safe conditions, i.e., with closed car door and locked landing door.

Both UCM cases, the "exiting of the door zone" as well as "excessive speed" (only for electrically operated lifts with rope drive) with open car door(s) and/or unlocked landing door(s), are detected by the control system. The lift system is brought to a standstill with the "LSU-UCM-A3 Error" error message and can only be put back into operation by resetting the error message in the control system menu by a competent person.

In the case of a power failure, the "LSU-UCM-A3 Error" is stored and prevents the installation from being operated upon restoration of power.

| Designation | | Detection time |
|---|---|---|
| FST-2XT safety circuit bypass control | Electr./mech. switching | 10 ms |
| Contactor for brake / valves | Siemens 3RTxxx | 12 ms |
| Zone magnet switch | Schmersal BN32r | |
| | Normally open (NO) contact switching time | 0.3 - 1.5 ms |
| | Restarting precision | + / - 0.25 mm |
| Speed signal > 0.2 ms | FST-2XT | 102 ms |
| Speed signal > 0.2 ms | Frequency inverter | 15 ms |

The English text is a translation of the German original. In case of any discrepancy, the German version is valid only.

Page 5 of 9

## Annex to the EU Type Examination Certificate
## No. EU-ESD 023 of 2016-10-04

TÜV SÜD
Industrie Service

It is not mandatory that the specified types of "contactors for brake/valves" as well as "zone magnet switches" be used. The type can be selected based on the reaction and detection times of the "contactors for brake/valves" as well as the "zone magnet switches". If types other than those specified above are used, verification of the reaction and detection times is to be provided.

Shown on the following pages are the wiring diagram for rope-operated passenger and freight lifts (figure 3), the wiring diagram for hydraulically operated lift systems with shutoff valve as braking element (figure 4) as well as the wiring diagram for hydraulically operated lift systems with redundant lowering valves as braking elements (figure 5).

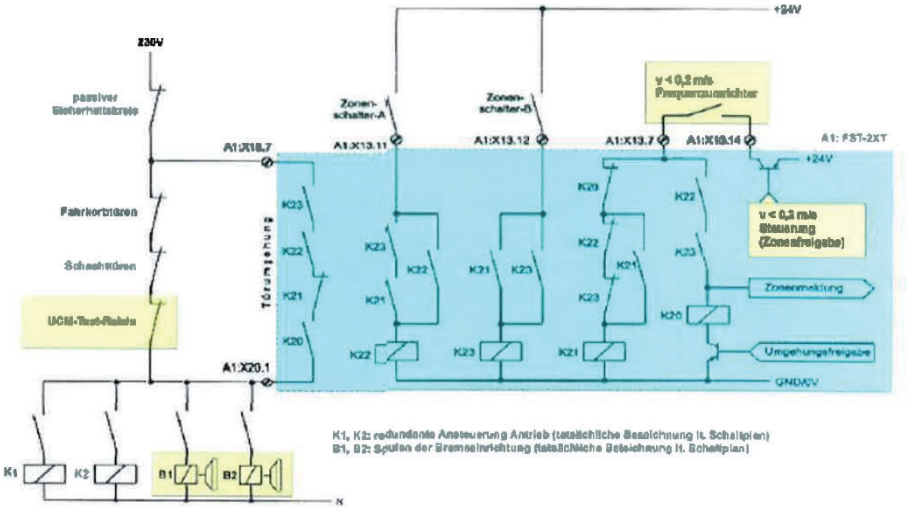


Figure 3: Wiring diagram for rope-operated passenger and freight lifts

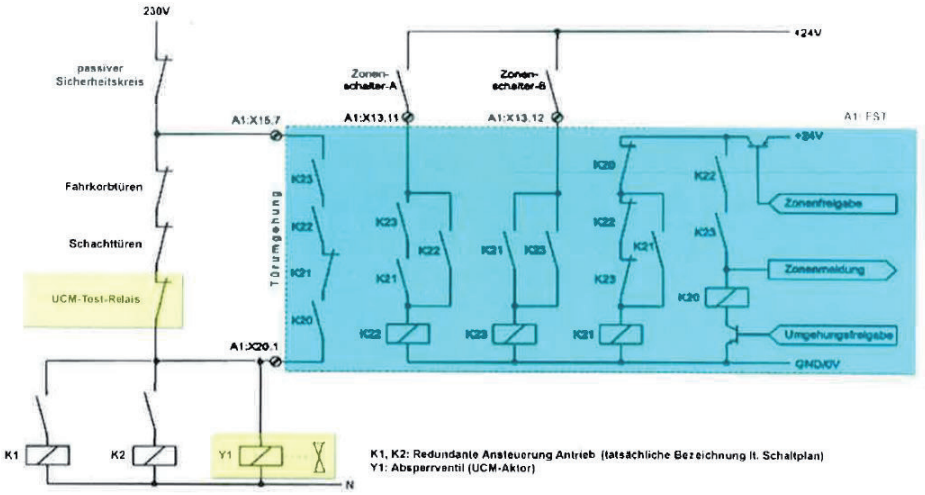


Figure 4: Wiring diagram for hydraulically operated lift systems with shutoff valve as braking element

## Annex to the EU Type Examination Certificate No. EU-ESD 023 of 2016-10-04

Industrie Service

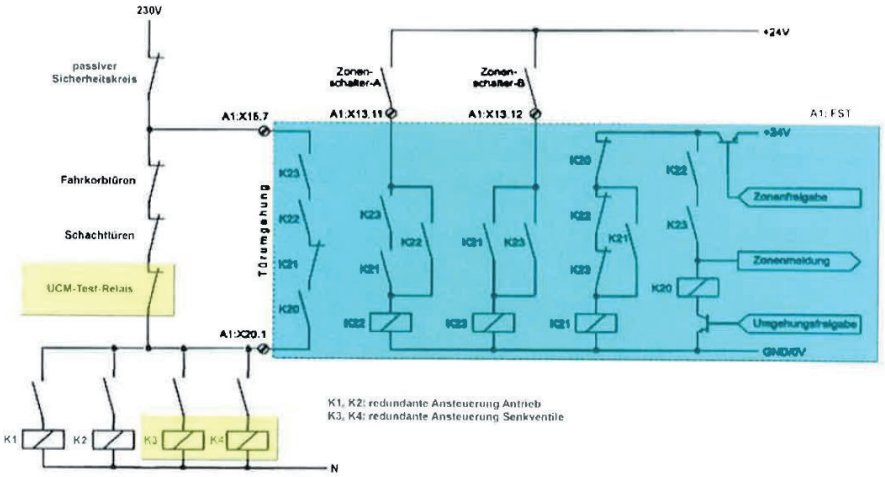


Figure 5: Wiring diagram for hydraulically operated lift systems with redundant lowering valves as braking elements

## 2 Conditions

2.1 The safety devices of the circuit board (tap for safety chain) are to be connected as specified in document BMP-Hinweise_FST-2XT.

2.2 The safety circuit bypass control is integrated on the printed circuit board as a fixed component of the FST-2XT 5 00 controller. It is designed for a temperature range from 0 to +65°C at a relative humidity of 15 to 85%.

2.3 The operating voltage is 24V DC, whereas the operating contacts and conductor paths are designed for a 230V AC (optional 48V DC, 110V AC) safety circuit, fuse-protected with max. 4A.

2.4 A closing contact from X20.1 to X14.1 is integrated in the controller for quick-start. Direct connection from X14.1 to X15.7 is not allowed.

2.5 The wiring must be implemented according to "FST-2XT safety circuit scan control and safety circuit bypass control schematic drawing" figure 2 (e.g., N-wire at X15.6, return wire of the contactors and valves at X20.2; X14.1 not connected to X15.7).

2.6 If the braking element is supplied with power directly via the electric safety circuit, redundant activation of the braking element is not necessary. If the braking element requires a voltage other than that available directly from the electric safety circuit, redundant activation with standstill monitoring is necessary.

**Annex to the EU Type Examination Certificate**
**No. EU-ESD 023 of 2016-10-04**

Industrie Service

2.7 If the braking element is not involved in the checking of the speed or deceleration in normal operation or does not stop the car in normal operation but is rather only responsible for braking in the UCM case, it is not necessary to monitor the proper function of the braking element.
Otherwise, the proper opening or closing of the braking element via the contacts required for this purpose is necessary via the control software.

2.8 Use only in combination with:
- Control systems manufactured by NEW *LIFT*, model FST-2XT

2.9 For electrically operated rope lifts, a signal must be made available to the control system in the event of speeds in excess of 0.2 m/s.

2.10 The subcomponents described in this certification must be supplemented with another subcomponent for the realisation of the "UCM-A3 function".
For this purpose, assembly operation must adhere to the requirements before performing the conformity assessment procedure.

2.11 For hydraulically operated lift systems, items 3.6, 3.7, 3.7.1, 3.7.2 and 5 of the UCM-A3 manual are to be adhered to during commissioning or recurring inspections and maintenance.

2.12 For electrically operated rope lift systems, items 4.6, 4.7, 4.7.1, 4.7.2 and 5 of the UCM-A3 manual are to be adhered to during commissioning or recurring inspections and maintenance.

2.13 The "UCM-A3" manual is to be included with the product.

2.14 The EU type examination certificate may only be used together with the corresponding appendix and attachment (manufacturer list for serial production). This attachment is updated according to information from the manufacturer / representative and published with the updated information.

**3 Notes**

3.1 This EU type examination certificate was prepared on the basis of the following harmonised standards:

- EN 81-1:1998 + A3:2009 (D), Appendix F.8
- EN 81-2:1998 + A3:2009 (D), Appendix F.8
- EN 81-20:2014 (D), Item 5.11.2.3
- EN 81-50:2014 (D), Item 5.6

In the event of changes or additions to the aforementioned standards or in the event of further developments to the state of the art, the EU type examination certificate must be revised.

3.2 The test results refer only to the "FST-2XT" and "FSM-2" printed circuit boards with electronic components with taps in the safety circuit and safety circuit bypass control as well as subsystem against unintended car movement and the associated EU type examination.

## Annex to the EU Type Examination Certificate
## No. EU-ESD 023 of 2016-10-04

Industrie Service

3.3 At the "detection device for unintended car movement (UCM) – door zone" a sign must be present (e.g., near the control system) with details on the identification of the component with the name of the manufacturer, EU type examination designation and type plate.

3.4 In the event of changes or deviations from the version documented here, an examination and, if necessary, adaptation of the alternative measures is required by the notified body.

3.5 This certificate is based on the state of the art, which is documented by the currently valid harmonised standards. If the event of changes or additions to these standards or in the event of further advances in the state of the art, a revision may become necessary.

The English text is a translation of the German original. In case of any discrepancy, the German version is valid only.

Page 9 of 9

NEW LIFT
NEUE ELEKTRONISCHE WEGE

# EU Declaration of Conformity

According to the EU-directive

## Product description:

Printed circuit boards FST-2XT (FST 5 00) and FSM-2 (FSM 5 20) with electronic components, pick-off connections in the safety circuit and safety bypass control as well as partial system against unintended car movement for passenger and goods lifts.

## Device types: „FST-2XT“ and „FSM-2“ in all delivered versions

The EU-type examination (Certificate-no.: EU-ESD 023) was conducted by the TÜV SÜD Industry Services GmbH, ID-Nr.: CE0036.

Manufacturing control according to QM-System ISO 9001:2015 and ARL 2014/33/EU Annex VI is carried out by the Association for Technical Inspection (TÜV Rheinland Industrie Service GmbH, ID-No.: CE0035).

The named control boards were developed, constructed and produced in accordance with the Council Directives on the approximation of the laws of the Member States.

- Low Voltage Directive 2014/35/EU
- EMC-Directive 2014/30/EU
- Lift Directive 2014/33/EU

The following standarts have been considered for the evaluation of the control board:

- EN81-20 /50:2014
- EN12015:2014
- EN12016:2013
- [EN 81-1/2: 1998 + A3:2009]

There exists a complete technical documentation. The manual for the devices is available. The safety instructions of the delivered manual must be observed! This declaration confirms the conformity of the mentioned standards and directives. It does not, however, include a guarantee of characteristics.

Graefelfing, 04.04.2019

Legally binding signature:

Peter Zeitler, Managing Director

NEW *LIFT* - Neue elektronische Wege Steuerungsbau GmbH
Lochhamer Schlag 8 - 82166 Graefelfing - Germany

## Notes

## Notes

NEW *LIFT*

NEUE ELEKTRONISCHE WEGE

NEW *LIFT* Steuerungsbau GmbH

Lochhamer Schlag 8
82166 Graefelfing

Tel +49 89 – 898 66 – 0
Fax +49 89 – 898 66 – 300
Mail info@newlift.de

Service line
Tel +49 89 – 898 66 – 110
Mail service@newlift.de

www.newlift.de